ETA-Danmark A/S
Göteborg Plads 1
DK-2150 Nordhavn
Tel. +45 72 24 59 00
Fax +45 72 24 59 04
Internet www.etadanmark.dk

Authorised and notified according to Article 29 of the Regulation (EU) No 305/2011 of the European Parliament and of the Council of 9 March 2011

MEMBER OF EOTA

European Technical Assessment ETA-11/0024 of 02/03/2017

I General Part

Technical Assessment Body issuing the ETA and designated according to Article 29 of the Regulation (EU) No 305/2011: ETA-Danmark A/S

Trade name of the construction product:	E.u.r.o. Tec screws type KonstruX", "Paneltwistec", "Topduo", "Terrassotec", "SP FK", "Speedo", "Hobotec", "Hapatec", "SP ZK", "Ecotec", "WBS", "FBAS", "VSS" and "Brutus"
Product family to which the above construction product belongs:	Screws for use in timber constructions
Manufacturer:	E.u.r.o. Tec GmbH Unter dem Hofe 5 D-58099 Hagen Tel. +49 2331 / 6245 - 0 Fax +49 2331 / 6245 - 200 Internet www.e-u-r-o-tec.de
Manufacturing plant:	Held on file by ETA-Danmark A/S
This European Technical Assessment contains:	49 pages including 5 annexes which form an integral part of the document
This European Technical Assessment is issued in accordance with Regulation (EU) No 305/2011, on the basis of:	European Assessment document (EAD) no. EAD 130118-00-0603 "Screws for timber constructions"
This version replaces:	The previous ETA with the same number issued on 2016-11-02

Translations of this European Technical Assessment in other languages shall fully correspond to the original issued document and should be identified as such.

Communication of this European Technical Assessment, including transmission by electronic means, shall be in full (excepted the confidential Annex(es) referred to above). However, partial reproduction may be made, with the written consent of the issuing Technical Assessment Body. Any partial reproduction has to be identified as such.

II SPECIFIC PART OF THE EUROPEAN TECHNICAL ASSESSMENT

1 Technical description of product and intended use

Technical description of the product
E.u.r.o.Tec "KonstruX", "Paneltwistec", "Topduo", "Terrassotec", "SP FK", "Speedo", "Hobotec", "Hapatec", "SP ZK", "Ecotec", "WBS", "VSS"; and "FBAS" screws and Brutus threaded rods are self-tapping screws to be used in timber structures. E.u.r.o.Tec "Paneltwistec", "Topduo", "Terrassotec", "SP FK", "Speedo", "Hobotec", "Hapatec", "SP ZK" and "FBAS" screws shall be threaded over a part of the length. E.u.r.o.Tec "KonstruX", "WBS" "VSS" and Brutus threaded rods screws shall be threaded over the full length. E.u.r.o.Tec "Ecotec" screws may be threaded over a part or over the full length. The screws shall be produced from carbon steel wire for nominal diameters of 3,5 mm to 12,0 mm and from stainless steel wire for nominal diameters of 3,5 mm to 8,0 mm. The nominal diameter of Brutus threaded rods is 16 mm. Where corrosion protection is required, the material or coating shall be declared in accordance with the relevant specification given in Annex A of EN 14592.

Geometry and Material
The nominal diameter (outer thread diameter), d, shall not be less than 3,5 mm and shall not be greater than 16,0 mm. The overall length, L, of screws shall not be less than 25 mm and shall not be greater than 1000 mm. The overall length of the threaded rods shall not be greater than 3000 mm. Other dimensions are given in Annex A.

The ratio of inner thread diameter to outer thread diameter d_i/d ranges from 0,57 to 0,72.

The screws are threaded over a minimum length ℓ_g of 4·d (i.e. $\ell_g \geq 4 \cdot d$).

The lead p (distance between two adjacent thread flanks) ranges from 0,38·d to 0,97·d.

No breaking shall be observed at a bend angle, α, of less than $(45/d^{0,7} + 20)$ degrees.

2 Specification of the intended use in accordance with the applicable EAD

The screws and threaded rods are used for connections in load bearing timber structures between members of solid timber (softwood), glued laminated timber, cross-laminated timber, and laminated veneer lumber, similar glued members, wood-based panels or steel. E.u.r.o. Tec "KonstruX" screws and Brutus threaded rods are also used as tensile or compressive reinforcement perpendicular to the grain.

Furthermore E.u.r.o. Tec screws with diameters between 6 mm and 12 mm may also be used for the fixing of thermal insulation on rafters.

Steel plates and wood-based panels except solid wood panels and cross laminated timber shall only be located on the side of the screw head. The following wood-based panels may be used:

- Plywood according to EN 636 or ETA
- Particleboard according to EN 312 or ETA
- Oriented Strand Board, Type OSB/3 and OSB/4 according to EN 300 or ETA
- Fibreboard according to EN 622-2 and 622-3 or ETA (minimum density 650 kg/m³)
- Cement bonded particleboard
- Solid wood panels according to EN 13353 and EN 13986 and cross laminated timber according to ETA
- Laminated Veneer Lumber, LVL
- Engineered wood products according to ETA, provided that the ETA for the product provides provisions for the use of self-tapping screws and these provisions are applied

The screws shall be driven into the wood without pre-drilling or after pre-drilling with a diameter not larger than the inner thread diameter for the length of the threaded part and with a maximum of the smooth shank diameter for the length of the smooth shank. The threaded rods shall be driven into softwood after pre-drilling with the following diameter:
Threaded rod 16 mm: Pre-drilling diameter 13 mm
Threaded rod shall only be driven into pre-drilled holes.

The screws are intended to be used in timber connections for which requirements for mechanical resistance and stability and safety in use in the sense of the Basic Works Requirements 1 and 4 of Regulation 305/2011 (EU) shall be fulfilled.

The design of the connections shall be based on the characteristic load-carrying capacities of the screws. The design capacities shall be derived from the characteristic capacities in accordance with Eurocode 5 or an appropriate national code.

The screws are intended for use for connections subject to static or quasi static loading.

Section 3.11 of this ETA contains the corrosion protection for E.u.r.o. Tec screws made from carbon steel and the material number of the stainless steel. The

martensitic stainless steel screws are for use in timber structures subject to the conditions defined by the service classes 1, 2 and 3 of EN 1995-1-1 (Eurocode 5).

The scope of the screws regarding resistance to corrosion shall be defined according to national provisions that apply at the installation site considering environmental conditions.

The provisions made in this European Technical Assessment are based on an assumed intended working life of the screws of 50 years.

The indications given on the working life cannot be interpreted as a guarantee given by the producer or Assessment Body, but are to be regarded only as a means for choosing the right products in relation to the expected economically reasonable working life of the works.

3 Performance of the product and references to the methods used for its assessment

Characteristic	Assessment of characteristic
3.1 Mechanical resistance and stability*) (BWR1)	
Tensile strength Screws made of carbon steel or stainless steel hardened (martensitic stainless steel) except KonstruX	Characteristic value $f_{tens,k}$: Screw d = 3,5 mm: 3,8 kN Screw d = 4,0 mm: 5,0 kN Screw d = 4,5 mm: 6,4 kN Screw d = 5,0 mm: 7,9 kN Screw d = 6,0 mm: 11 kN Screw d = 8,0 mm: 20 kN Screw d = 10,0 mm: 28 kN Screw d = 12,0 mm: 25 kN
KonstruX screws	Screw d = 6,5 mm: 17 kN Screw d = 8,0 mm: 25 kN Screw d = 9,0 mm: 30 kN Screw d = 10,0 mm: 33 kN Screw d = 11,3 mm: 50 kN
Screws made of stainless steel unhardened (austenitic stainless steel A2 and A4)	Screw d = 3,5 mm: 2,1 kN Screw d = 4,0 mm: 2,8 kN Screw d = 4,5 mm: 3,5 kN Screw d = 4,8 mm: 5,0 kN Screw d = 5,0 mm: 4,3 kN Screw d = 5,5 mm: 6,0 kN Screw d = 6,0 mm: 6,2 kN Screw d = 8,0 mm: 11 kN
Brutus threaded rod	Rod d = 16 mm: 115 kN
Insertion moment	Ratio of the characteristic torsional strength to the mean insertion moment: $f_{tor,k} / R_{tor,mean} \geq 1,5$
Torsional strength Screws made of carbon steel or stainless steel hardened (martensitic stainless steel) except KonstruX	Characteristic value $f_{tor,k}$: Screw d = 3,5 mm: 2,0 Nm Screw d = 4,0 mm: 3,0 Nm Screw d = 4,5 mm: 4,2 Nm Screw d = 5,0 mm: 5,6 Nm Screw d = 6,0 mm: 9,5 Nm Screw d = 8,0 mm: 22 Nm Screw d = 10,0 mm: 40 Nm Screw d = 12,0 mm: 42 Nm
KonstruX screws	Screw d = 6,5 mm: 19 Nm Screw d = 8,0 mm: 28 Nm Screw d = 9,0 mm: 51 Nm Screw d = 10,0 mm: 48 Nm Screw d = 11,3 mm: 80 Nm
Screws made of stainless steel unhardened (austenitic stainless steel A2 and A4)	Screw d = 3,5 mm: 1,2 Nm Screw d = 4,0 mm: 1,8 Nm Screw d = 4,5 mm: 2,5 Nm Screw d = 4,8 mm: 4,3 Nm Screw d = 5,0 mm: 3,4 Nm Screw d = 5,5 mm: 5,0 Nm Screw d = 6,0 mm: 5,7 Nm Screw d = 8,0 mm: 13 Nm
Brutus threaded rod	Rod d = 16 mm: 180 Nm

Characteristic		Assessment of characteristic
3.2	**Safety in case of fire (BWR2)**	
	Reaction to fire	The screws are made from steel classified as performance class A1 of the characteristic reaction to fire, in accordance with the provisions of EC decision 96/603/EC, amended by EC Decision 2000/605/EC.
3.3	**Hygiene, health and the environment (BWR3)**	
	Influence on air quality	The product does not contain/release dangerous substances specified in TR 034, dated October 2015 **)
3.7	**Sustainable use of natural resources (BR7)**	No Performance Determined
3.8	**General aspects related to the performance of the product**	The screws have been assessed as having satisfactory durability and serviceability when used in timber structures using the timber species described in Eurocode 5 and subject to the conditions defined by service classes 1, 2 and 3
	Identification	See Annex A

*) See additional information in section 3.9 – 3.12.
**) In addition to the specific clauses relating to dangerous substances contained in this European technical Assessment, there may be other requirements applicable to the products falling within its scope (e.g. transposed European legislation and national laws, regulations and administrative provisions). In order to meet the provisions of the Construction Products Regulation, these requirements need also to be complied with, when and where they apply.

3.9 Mechanical resistance and stability

The load-carrying capacities for E.u.r.o.Tec screws are applicable to the wood-based materials mentioned in paragraph 1 even though the term timber has been used in the following.

The characteristic lateral load-carrying capacities and the characteristic axial withdrawal capacities of E.u.r.o.Tec screws should be used for designs in accordance with Eurocode 5 or an appropriate national code.

For screws arranged under an angle between screw axis and grain direction $\alpha \leq 15°$, the minimum threaded penetration length is: $\ell_{ef} \geq \min(4 \cdot d / \sin\alpha ; 20 \cdot d)$. For $15° < \alpha \leq 90°$ the minimum threaded must be $\ell_{ef} \geq 4 \cdot d$.. For the fixing of rafters, point side penetration must be at least 40 mm, $\ell_{ef} \geq 40$ mm.

The mathematical penetration length of the threaded rods shall be limited to 1000 mm even if the actual penetration length is longer.

ETA's for structural members or wood-based panels must be considered where applicable.

Lateral load-carrying capacity

The characteristic lateral load-carrying capacity of E.u.r.o.Tec screws or threaded rods shall be calculated according to Eurocode 5 using the outer thread diameter d as the nominal diameter of the screw. The contribution from the rope effect may be considered.

For steel-to-timber connections with "WBS" screws d = 5 mm, a thick steel plate may be assumed for steel plate thickness $t \geq 2{,}0$ mm.

The characteristic yield moment shall be calculated from:

E.u.r.o.Tec screws for 3,5 mm $\leq$ d $\leq$ 10,0 mm made of carbon steel or stainless steel hardened martensitic stainless steel except KonstruX:

$M_{y,k} = 0{,}15 \cdot 600 \cdot d^{2,6}$ [Nmm]

Paneltwistec screws:
Screw d = 12,0 mm: 40000 Nmm

E.u.r.o.Tec threaded rods:
Rod d = 16,0 mm: 240000 Nmm

E.u.r.o.Tec KonstruX screws:
Screw d = 6,5 mm: 15000 Nmm
Screw d = 8,0 mm: 25000 Nmm
Screw d = 9,0 mm: 40000 Nmm
Screw d = 10,0 mm: 40000 Nmm
Screw d = 11,3 mm: 70000 Nmm

E.u.r.o.Tec screws for 3,5 mm $\leq$ d $\leq$ 8,0 mm made of stainless steel unhardened (austenitic stainless steel A2 and A4) except FBAS:

$M_{y,k} = 0{,}15 \cdot 320 \cdot d^{2,6}$ [Nmm]

E.u.r.o.Tec FBAS screws:
Screw d = 4,8 mm: 3800 Nmm
Screw d = 5,5 mm: 5000 Nmm

where
d outer thread diameter [mm]

The embedding strength for screws in non-pre-drilled holes arranged at an angle between screw axis and grain direction, $0° \leq \alpha \leq 90°$ is:

$$f_{h,k} = \frac{0{,}082 \cdot \rho_k \cdot d^{-0,3}}{2{,}5 \cdot \cos^2\alpha + \sin^2\alpha} \quad [\text{N/mm}^2]$$

and accordingly for screws in pre-drilled holes:

$$f_{h,k} = \frac{0{,}082 \cdot \rho_k \cdot (1 - 0{,}01 \cdot d)}{2{,}5 \cdot \cos^2\alpha + \sin^2\alpha} \quad [\text{N/mm}^2]$$

Where
ρ_k characteristic timber density [kg/m³];
d outer thread diameter [mm];
α angle between screw axis and grain direction.

The embedding strength for screws arranged parallel to the plane of cross laminated timber, independent of the angle between screw axis and grain direction, $0° \leq \alpha \leq 90°$, may be calculated from:

$$f_{h,k} = 20 \cdot d^{-0,5} \quad [\text{N/mm}^2]$$

Where
d outer thread diameter [mm]

The embedding strength for screws or threaded rods in the wide face of cross laminated timber should be assumed as for solid timber based on the characteristic density of the outer layer. If relevant, the angle between force and grain direction of the outer layer should be taken into account.

The direction of the lateral force shall be perpendicular to the screw axis and parallel to the wide face of the cross laminated timber.

Axial withdrawal capacity

The characteristic axial withdrawal capacity of E.u.r.o.Tec screws in solid timber (softwood), glued laminated timber or cross-laminated timber members at an angle of $0° \leq \alpha \leq 90°$ (screws with tip other than type BS) or $30° \leq \alpha \leq 90°$ (screws with tip type BS or Brutus threaded rod) to the grain shall be calculated from:

$$F_{ax,\alpha,Rk} = n_{ef} \cdot k_{ax} \cdot f_{ax,k} \cdot d \cdot \ell_{ef} \cdot \left(\frac{\rho_k}{350}\right)^{0,8} \quad [\text{N}]$$

Where

$F_{ax,\alpha,Rk}$	characteristic withdrawal capacity of the group of screw at an angle α to the grain [N]
n_{ef}	effective number of screws according to Eurocode 5
k_{ax}	$k_{ax} = 1{,}0$ for $45° \leq \alpha \leq 90°$

$$k_{ax} = 0,3 + \frac{0,7 \cdot \alpha}{45°} \text{ for } 0° \le \alpha < 45°$$

$f_{ax,k}$ Characteristic withdrawal parameter
Screws with tip type BS:
Screw d ≤ 10 mm: $f_{ax,k}$ = 9,0 N/mm²
Screw d = 11,3 mm: $f_{ax,k}$ = 8,0 N/mm²
Screws with tip other than type BS:
Screw d = 3,5 mm: $f_{ax,k}$ = 13,3 N/mm²
Screw d = 4,0 mm: $f_{ax,k}$ = 12,9 N/mm²
Screw d = 4,5 mm: $f_{ax,k}$ = 12,5 N/mm²
Screw d = 4,8 mm: $f_{ax,k}$ = 12,1 N/mm²
Screw d = 5,0 mm: $f_{ax,k}$ = 12,1 N/mm²
Screw d = 5,5 mm: $f_{ax,k}$ = 11,4 N/mm²
Screw d = 6,0 mm: $f_{ax,k}$ = 11,4 N/mm²
Screw d = 6,5 mm: $f_{ax,k}$ = 11,4 N/mm²
Screw d = 8,0 mm: $f_{ax,k}$ = 11,1 N/mm²
Screw or threaded rod d ≥ 10,0 mm: $f_{ax,k}$ = 10,8 N/mm²

d outer thread diameter [mm]
ℓ_{ef} point side penetration length of the threaded part according to Eurocode 5 [mm]
α angle between grain and screw axis ($\alpha \ge 0°$ for screws with tip other than type BS; $\alpha \ge 30°$ for screws with tip type BS or Brutus threaded rod)
ρ_k characteristic density [kg/m³]

For screws arranged under an angle between screw axis and grain direction $\alpha \le 15°$, the minimum threaded penetration length is: $\ell_{ef} \ge \min(4 \cdot d / \sin\alpha; 20 \cdot d)$. For $15° < \alpha \le 90°$ the minimum threaded penetration length must be $\ell_{ef} \ge 4 \cdot d$

For screws penetrating more than one layer of cross laminated timber, the different layers may be taken into account proportionally.

The axial withdrawal capacity is limited by the head pull-through capacity and the tensile or compressive capacity of the screw.

Bending angle
A minimum plastic bending angle of $45°/d^{0,7} + 20°$ was reached without breaking the screws.

Head pull-through capacity
The characteristic head pull-through capacity of E.u.r.o.Tec screws shall be calculated according to Eurocode 5 from:

$$F_{ax,\alpha,Rk} = n_{ef} \cdot f_{head,k} \cdot d_h^2 \cdot \left(\frac{\rho_k}{350}\right)^{0,8} \quad [N]$$

where:
$F_{ax,\alpha,Rk}$ characteristic head pull-through capacity of the connection at an angle $\alpha \ge 30°$ to the grain [N]
n_{ef} effective number of screws according to Eurocode 5
$f_{head,k}$ characteristic head pull-through parameter [N/mm²]
d_h diameter of the screw head [mm]
ρ_k characteristic density [kg/m³], for wood-based panels ρ_k = 380 kg/m³

Characteristic head pull-through parameter for E.u.r.o.Tec screws with head type FK and FK2 in connections with timber and in connections with wood-based panels with thicknesses above 20 mm:
$f_{head,k}$ = 10,0 N/mm²

Characteristic head pull-through parameter for E.u.r.o.Tec screws with head type other than FK and FK2 in connections with timber and in connections with wood-based panels with thicknesses above 20 mm:
$f_{head,k}$ = 12,0 N/mm²

Characteristic head pull-through parameter for screws in connections with wood-based panels with thicknesses between 12 mm and 20 mm:
$f_{head,k}$ = 8 N/mm²

Screws in connections with wood-based panels with a thickness below 12 mm (minimum thickness of the wood based panels of 1,2·d with d as outer thread diameter):
$f_{head,k}$ = 8 N/mm²
limited to $F_{ax,Rk}$ = 400 N

The head diameter d_h shall be greater than $1,8 \cdot d_s$, where d_s is the smooth shank or the wire diameter. Otherwise the characteristic head pull-through capacity $F_{ax,\alpha,Rk} = 0$.

The minimum thickness of wood-based panels according to the clause 2.1 must be observed.

In steel-to-timber connections the head pull-through capacity may be disregarded.

Tensile capacity
The characteristic tensile strength $f_{tens,k}$ of E.u.r.o.Tec screws or threaded rods made of carbon steel or stainless steel hardened (martensitic stainless steel) except KonstruX is:

Screw d = 3,5 mm: 3,8 kN
Screw d = 4,0 mm: 5,0 kN
Screw d = 4,5 mm: 6,4 kN
Screw d = 5,0 mm: 7,9 kN
Screw d = 6,0 mm: 11 kN
Screw d = 8,0 mm: 20 kN
Screw d = 10,0 mm: 28 kN
Screw d = 12,0 mm: 25 kN
Rod d = 16,0 mm: 115 kN

The characteristic tensile strength $f_{tens,k}$ of E.u.r.o.Tec KonstruX screws is:

Screw d = 6,5 mm: 17 kN
Screw d = 8,0 mm: 25 kN

Screw d = 9,0 mm: 30 kN
Screw d = 10,0 mm: 33 kN
Screw d = 11,3 mm: 50 kN

The characteristic tensile strength $f_{tens,k}$ of E.u.r.o.Tec screws made of stainless steel unhardened (austenitic stainless steel A2 and A4) is:

Screw d = 3,5 mm: 2,1 kN
Screw d = 4,0 mm: 2,8 kN
Screw d = 4,5 mm: 3,5 kN
Screw d = 4,8 mm: 5,0 kN
Screw d = 5,0 mm: 4,3 kN
Screw d = 5,5 mm: 6,0 kN
Screw d = 6,0 mm: 6,2 kN
Screw d = 8,0 mm: 11 kN

For screws used in combination with steel plates, the tear-off capacity of the screw head should be greater than the tensile strength of the screw.

Compressive capacity
The characteristic buckling capacity $F_{ki,Rk}$ of E.u.r.o.Tec "KonstruX" screws or "Brutus" threaded rods embedded in timber shall be calculated from:

$$F_{ki,Rk} = \kappa_c \cdot N_{pl,k} \quad [N]$$

where

$$\kappa_c = \begin{cases} 1 & \text{for } \bar{\lambda}_k \le 0,2 \\ \dfrac{1}{k + \sqrt{k^2 - \bar{\lambda}_k^2}} & \text{for } \bar{\lambda}_k > 0,2 \end{cases}$$

$$k = 0,5 \cdot \left[1 + 0,49 \cdot (\bar{\lambda}_k - 0,2) + \bar{\lambda}_k^2\right]$$

The relative slenderness ratio shall be calculated from:

$$\bar{\lambda}_k = \sqrt{\frac{N_{pl,k}}{N_{ki,k}}}$$

Where

$$N_{pl,k} = \pi \times \frac{d_i^2}{4} \times f_{y,k} \quad [N]$$

is the characteristic value for the axial capacity in case of plastic analysis referred to the inner thread cross section.

Characteristic yield strength:
$f_{y,k}$ = 1000 [N/mm²] for KonstruX screws

$f_{y,k}$ = 750 [N/mm²] for Brutus threaded rods

Characteristic ideal elastic buckling load:

$$N_{ki,k} = \sqrt{c_h \cdot E_S \cdot I_S} \quad [N]$$

Elastic foundation of the screw:

$$c_h = (0,19 + 0,012 \cdot d) \cdot \rho_k \cdot \left(\frac{\alpha}{180°} + 0,5\right) \quad [N/mm^2]$$

Modulus of elasticity:
E_s = 205000 [N/mm²]

Second moment of area:

$$I_S = \frac{\pi}{64} \times d_i^4 \quad [mm^4]$$

d_i = inner thread diameter [mm]

α = angle between screw axis and grain direction [°]

Note: When determining design values of the compressive capacity it should be considered that $f_{ax,d}$ is to be calculated using k_{mod} and γ_M for timber according to EN 1995 while $N_{pl,d}$ is calculated using $\gamma_{M,0}$ for steel according to EN 1993.

Mechanically jointed beams
"Konstrux" screws with a full thread or "Brutus" threaded rods may be used for connections in structural members which are composed of several parts in mechanically jointed beams or columns.

The axial slip modulus K_{ser} of a screw or threaded rod with a full thread for the serviceability limit state per side should be taken independent of angle α to the grain as:

$$C = K_{ser} = 780 \cdot d^{0,2} \cdot \ell_{ef}^{0,4} \quad [N/mm]$$

for screws

$C = K_{ser} = 250 \cdot \ell_{ef}$ [N/mm] for threaded rods

Where
d outer thread diameter [mm]
ℓ_{ef} penetration length in the structural member [mm] (see Annex B)

Compression reinforcement
See annex C

Tensile reinforcement
See annex D

Thermal insulation material on top of rafters
See annex E

Combined laterally and axially loaded screws
For screwed connections subjected to a combination of axial and lateral load, the following expression should be satisfied:

$$\left(\frac{F_{ax,Ed}}{F_{ax,Rd}}\right)^2 + \left(\frac{F_{la,Ed}}{F_{la,Rd}}\right)^2 \le 1$$

where
$F_{ax,Ed}$ axial design load of the screw
$F_{la,Ed}$ lateral design load of the screw
$F_{ax,Rd}$ design load-carrying capacity of an axially loaded screw
$F_{la,Rd}$ design load-carrying capacity of a laterally loaded screw

3.11 Aspects related to the performance of the product

3.11.1 Corrosion protection in service class 1, 2 and 3.
The E.u.r.o. Tec screws with nominal diameters of 3,5 mm to 16,0 mm are produced from carbon wire. Screws made from carbon steel are electrogalvanised or otherwise coated appropriate for the expected working life and service class. The mean thickness of the zinc coating is 5µm.
Screws with nominal diameters of 3,5 mm to 8,0 mm are produced from hardened stainless steel no. 1.4006 or unhardened stainless steel no. 1.4301, 1.4401, 1.4567 and 1.4578.

3.12 General aspects related to the intended use of the product

The screws or threaded rods are manufactured in accordance with the provisions of the European Technical Assessment using the automated manufacturing process and laid down in the technical documentation.

The installation shall be carried out in accordance with Eurocode 5 or an appropriate national code unless otherwise is defined in the following. Instructions from E.u.r.o.Tec GmbH should be considered for installation.

The screws or threaded rods are used for connections in load bearing timber structures between members of solid timber (softwood), glued laminated timber, cross-laminated timber, and laminated veneer lumber, similar glued members, wood-based panels or steel members.

The screws or threaded rods may be used for connections in load bearing timber structures with structural members according to an associated ETA, if according to the associated ETA of the structural member a connection in load bearing timber structures with screws according to a ETA is allowed.

E.u.r.o.Tec fully threaded „KonstruX" screws or threaded rods are also used as tensile or compressive reinforcement perpendicular to the grain.

Furthermore the screws with diameters of at least 6 mm may also be used for the fixing of insulation on top of rafters.

A minimum of two screws or threaded rods should be used for connections in load bearing timber structures.

Wood-based panels and steel plates should only be arranged on the side of the screw head. The minimum thickness of wood-based panels should be 1,2·d. Furthermore the minimum thickness for following wood-based panels should be:

- Plywood, Fibreboards: 6 mm
- Particleboards, OSB, Cement Particleboards: 8 mm
- Solid wood panels: 12 mm

For structural members according to ETA's the terms of the ETA's must be considered.

If screws with an outer thread diameter $d \geq 8$ mm are used in load bearing timber structures, the structural solid or glued laminated timber, laminated veneer lumber and similar glued members must be from spruce, pine or fir. This does not apply for screws or threaded rods in pre-drilled holes or for screws with tip type BS or rBS DAG in non-predrilled holes.

The minimum angle between the screw axis of screws with tip type BS or Brutus threaded rods and the grain direction is $\alpha = 30°$. For other screws: $0° \leq \alpha \leq 90°$.

The screws shall be driven into the wood with or without pre-drilling. The maximum pre-drilling diameter is the inner thread diameter for the length of the threaded part and the smooth shank diameter for the depth of the smooth shank. Brutus 16 mm threaded rods shall be driven into softwood after pre-drilling with the following diameter:
Brutus threaded rod 16 mm: Pre-drilling diameter 13 mm
Brutus threaded rod shall only be driven into pre-drilled holes.

The hole diameter in steel members must be predrilled with a suitable diameter.

Only the equipment prescribed by E.u.r.o.Tec GmbH shall be used for driving the screws.

In connections with screws with countersunk head according to Annex A the head must be flush with the surface of the connected structural member. A deeper countersink is not allowed.

For structural timber members, minimum spacing and distances for screws or threaded rods in predrilled holes are given in Eurocode 5 clause 8.3.1.2 and table 8.2 as for nails in predrilled holes. Here, the outer thread diameter d must be considered.

For screws in non-predrilled holes, minimum spacing and distances are given in Eurocode 5 clause 8.3.1.2 and table 8.2 as for nails in non-predrilled holes.

For Douglas fir members minimum spacing and distances parallel to the grain shall be increased by 50%.

Minimum distances from loaded or unloaded ends must be 15·d for screws in non-predrilled holes with outer thread diameter $d \geq 8$ mm and timber thickness $t < 5 \cdot d$.

Minimum distances from the unloaded edge perpendicular to the grain may be reduced to 3·d also for timber thickness $t < 5 \cdot d$, if the spacing parallel to the grain and the end distance is at least 25·d.

Minimum distances and spacing for exclusively axially loaded screws in non-predrilled holes in members with a minimum thickness $t = 10 \cdot d$ and a minimum width of 8·d or 60 mm, whichever is the greater, may be taken as:

Spacing a_1 parallel to the grain $a_1 = 5 \cdot d$
Spacing a_2 perpendicular to the grain $a_2 = 5 \cdot d$
Distance $a_{1,c}$ from centre of the screw-part in timber to the end grain $a_{1,c} = 10 \cdot d$
Distance $a_{2,c}$ from centre of the screw-part in timber to the edge $a_{2,c} = 4 \cdot d$

Spacing a_2 perpendicular to the grain may be reduced from 5·d to 2,5·d, if the condition $a_1 \cdot a_2 \geq 25 \cdot d^2$ is fulfilled.

Minimum distances and spacing for exclusively axially loaded screws in predrilled holes or for screws with tip type BS or rBS DAG in non-predrilled holes in members with a minimum thickness t = 10·d and a minimum width of 8·d or 60 mm, whichever is the greater, may be taken as:

Spacing a_1 parallel to the grain $a_1 = 5 \cdot d$
Spacing a_2 perpendicular to the grain $a_2 = 5 \cdot d$
Distance $a_{1,c}$ from centre of the screw-part in timber to the end grain $a_{1,c} = 5 \cdot d$
Distance $a_{2,c}$ from centre of the screw-part in timber to the edge $a_{2,c} = 3 \cdot d$

Spacing a_2 perpendicular to the grain may be reduced from 5·d to 2,5·d, if the condition $a_1 \cdot a_2 \geq 25 \cdot d^2$ is fulfilled.

For a crossed screw couple the minimum spacing between the crossing screws is 1,5·d.

Minimum thickness for structural members is t = 24 mm for screws with outer thread diameter d < 8 mm, t = 30 mm for screws with outer thread diameter d = 8 mm, and t = 40 mm for screws with outer thread diameter d = 10 mm.

Unless specified otherwise in the technical specification (ETA or hEN) of cross laminated timber, minimum distances and spacing for screws in the wide face of cross laminated timber members with a minimum thickness t = 10·d may be taken as (see Annex B):

Spacing a_1 parallel to the grain $a_1 = 4 \cdot d$
Spacing a_2 perpendicular to the grain $a_2 = 2{,}5 \cdot d$
Distance $a_{3,c}$ from centre of the screw-part in timber to the unloaded end grain $a_{3,c} = 6 \cdot d$
Distance $a_{3,t}$ from centre of the screw-part in timber to the loaded end grain $a_{3,t} = 6 \cdot d$
Distance $a_{4,c}$ from centre of the screw-part in timber to the unloaded edge $a_{4,c} = 2{,}5 \cdot d$
Distance $a_{4,t}$ from centre of the screw-part in timber to the loaded edge $a_{4,t} = 6 \cdot d$

Unless specified otherwise in the technical specification (ETA or hEN) of cross laminated timber, minimum distances and spacing for screws in the edge surface of cross laminated timber members with a minimum thickness t = 10·d and a minimum penetration depth perpendicular to the edge surface of 10·d may be taken as (see Annex B):

Spacing a_1 parallel to the CLT plane $a_1 = 10 \cdot d$
Spacing a_2 perpendicular to the CLT plane $a_2 = 4 \cdot d$
Distance $a_{3,c}$ from centre of the screw-part in timber to the unloaded end $a_{3,c} = 7 \cdot d$
Distance $a_{3,t}$ from centre of the screw-part in timber to the loaded end $a_{3,t} = 12 \cdot d$
Distance $a_{4,c}$ from centre of the screw-part in timber to the unloaded edge $a_{4,c} = 3 \cdot d$
Distance $a_{4,t}$ from centre of the screw-part in timber to the loaded edge $a_{4,t} = 6 \cdot d$

4 Attestation and verification of constancy of performance (AVCP)

4.1 AVCP system

According to the decision 97/176/EC of the European Commission1, as amended, the system(s) of assessment and verification of constancy of performance (see Annex V to Regulation (EU) No 305/2011) is 3.

5 Technical details necessary for the implementation of the AVCP system, as foreseen in the applicable EAD

Technical details necessary for the implementation of the AVCP system are laid down in the control plan deposited at ETA-Danmark.

Issued in Copenhagen on 2017-03-02 by

Thomas Bruun
Managing Director, ETA-Danmark

Annex A
KonstruX HF
carbon steel[1]

nominal size		Ø6,5	Ø8,0	Ø9,0	Ø10,0	Ø11,3
d	min	6,20	7,80	8,70	9,60	10,70
	max	6,80	8,30	9,30	10,30	11,30
di	min	4,20	5,00	6,10	5,70	7,70
	max	4,80	5,40	6,70	6,30	8,30
dh	min	7,70	9,50	9,50	12,50	12,50
	max	8,30	10,50	10,50	13,50	13,50
hh	min	5,20	6,60	6,60	6,00	6,00
	max	5,70	7,40	7,40	7,00	7,00
p	min	4,41	4,68	5,04	5,04	5,04
	max	5,39	5,72	6,16	6,16	6,16
dt	min	4,70	5,80	6,20	6,30	8,10
	max	5,10	6,20	6,60	6,70	8,50
t	min	6,00	7,00	7,00	11,00	11,00
	max	8,00	9,00	9,00	12,00	13,00
dh2	min	11,50	14,00	14,00	17,30	18,00
	max	12,00	15,00	15,00	18,30	19,00
hh2	min	5,40	7,00	6,50	8,20	6,50
	max	5,90	7,40	7,50	9,20	7,50
dh3	min	-	21,50	21,50	19,50	21,50
	max		22,50	22,50	20,50	22,50
dm	min	-	5,40	-	6,80	-
	max		5,80		7,20	
hm	min	-	4,30	-	3,80	-
	max		4,70		4,20	
dm2	min	-	6,10	-	7,10	-
	max		6,30		7,30	
TX	size	TX20	TX40	TX40	TX50	TX50
SW	wrench size	-	SW13	-	-	-
SW2	wrench size	SW8	SW10	SW10	SW13	SW13

All dimensions in mm.

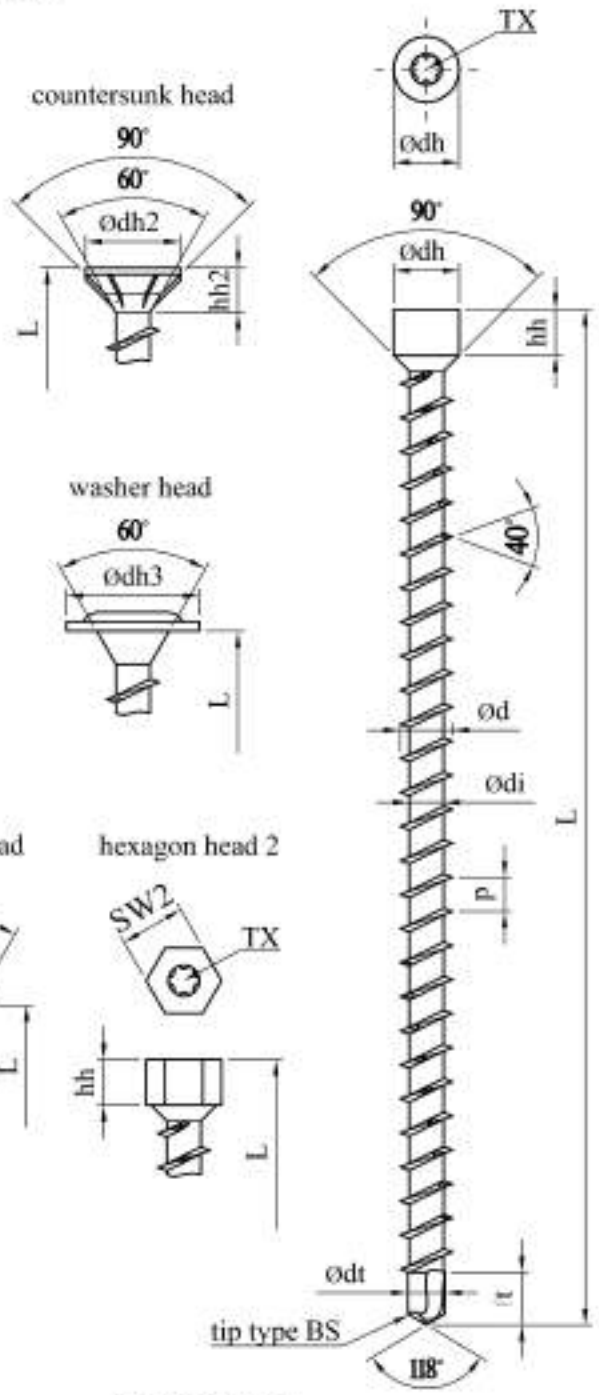

L				
Ø6,5	Ø8,0	Ø9,0	Ø10,0	Ø11,3
80 -2,0	95 -2,0	200 -2,0	125 -2,0	300 -3,0
100 -2,0	125 -2,0	220 -3,0	155 -2,0	330 -4,0
120 -2,0	155 -2,0	240 -3,0	195 -2,0	360 -4,0
140 -2,0	195 -2,0	260 -3,0	220 -3,0	400 -4,0
160 -2,0	220 -3,0	280 -3,0	245 -3,0	450 -5,0
195 -2,0	245 -3,0	300 -4,0	270 -3,0	500 -5,0
-	275 -3,0	330 -4,0	300 -3,0	550 -5,0/+2,0
-	295 -3,0	360 -4,0	330 -4,0	600 -5,0/+2,0
-	330 -4,0	400 -4,0	360 -4,0	650 -8,0/+2,0
-	375 -4,0	450 -5,0	400 -4,0	700 -8,0/+2,0
-	400 -4,0	500 -5,0	450 -5,0	750 -8,0/+2,0
-	430 -5,0	550 -5,0/+2,0	500 -5,0	800 -8,0/+2,0
-	480 -5,0	600 -5,0/+2,0	550 -5,0/+2,0	850 -8,0/+2,0
-	-	-	600 -5,0/+2,0	900 -8,0/+2,0
-	-	-	-	1000 -8,0/+2,0

All dimensions in mm.

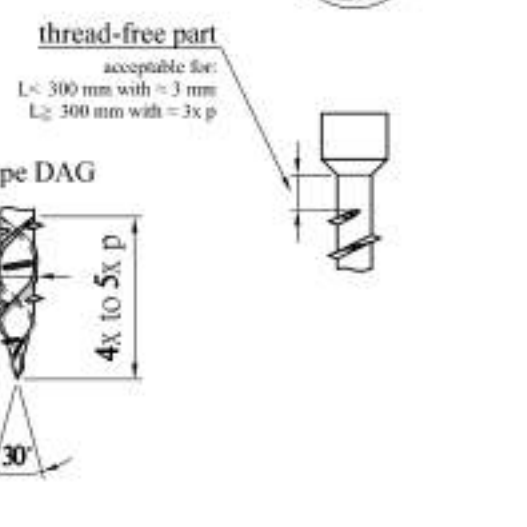

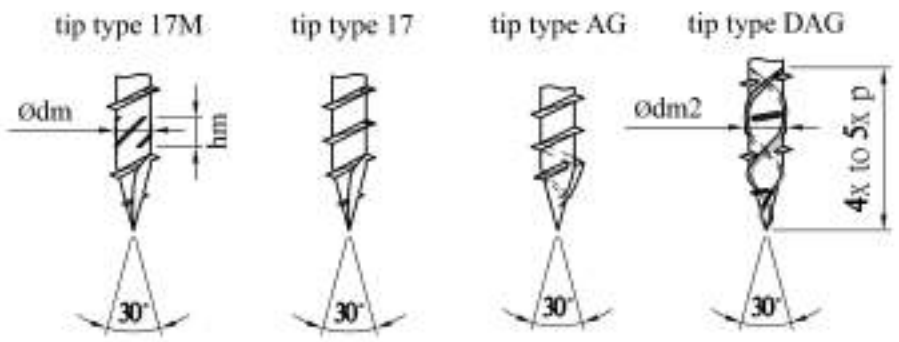

[1] Material specification held on file by ETA Danmark.

KonstruX ST
carbon steel[1]

nominal size		Ø6,5	Ø8,0	Ø10,0
d	min	6,20	7,60	9,60
	max	6,80	8,30	10,20
di	min	4,20	4,90	5,70
	max	4,80	5,40	6,10
dh	min	7,70	9,50	12,50
	max	8,30	10,50	13,50
hh	min	5,00	6,00	6,00
	max	6,00	7,00	7,00
p	min	2,70	3,40	4,10
	max	3,30	4,20	5,10
dt	min	4,10	4,70	5,30
	max	4,50	5,10	5,70
t	min	3,50	4,00	5,00
	max	5,00	5,00	6,00
dh2	min	11,00	14,00	17,30
	max	12,00	15,00	18,30
hh2	min	5,40	7,00	7,30
	max	5,90	7,40	7,70
dh3	min	-	21,50	19,50
	max		22,50	20,50
dm	min	4,60	5,40	6,10
	max	5,20	6,20	6,90
TX	size	TX30	TX40	TX50
SW	wrench size	-	SW13	-
SW2	wrench size	SW8	SW10	SW13

All dimensions in mm.

L		
Ø6,5	Ø8,0	Ø10,0
80 -2,0	95 -2,0	125 -2,0
100 -2,0	125 -2,0	155 -2,0
120 -2,0	155 -2,0	195 -2,0
140 -2,0	195 -2,0	220 -3,0
160 -2,0	220 -3,0	245 -3,0
195 -2,0	245 -3,0	270 -3,0
-	275 -3,0	300 -3,0
-	295 -3,0	330 -4,0
-	330 -4,0	360 -4,0
-	375 -4,0	400 -4,0
-	400 -4,0	450 -5,0
-	430 -5,0	500 -5,0
-	480 -5,0	550 -5,0/+2,0
-	-	600 -5,0/+2,0

All dimensions in mm.

countersunk head

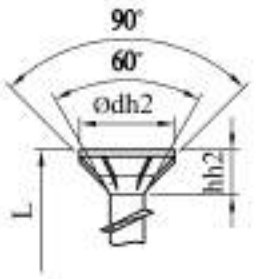

washer head

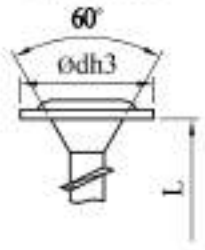

hexagon head

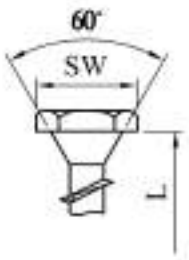

hexagon head 2

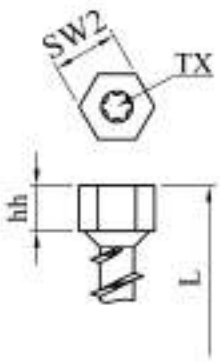

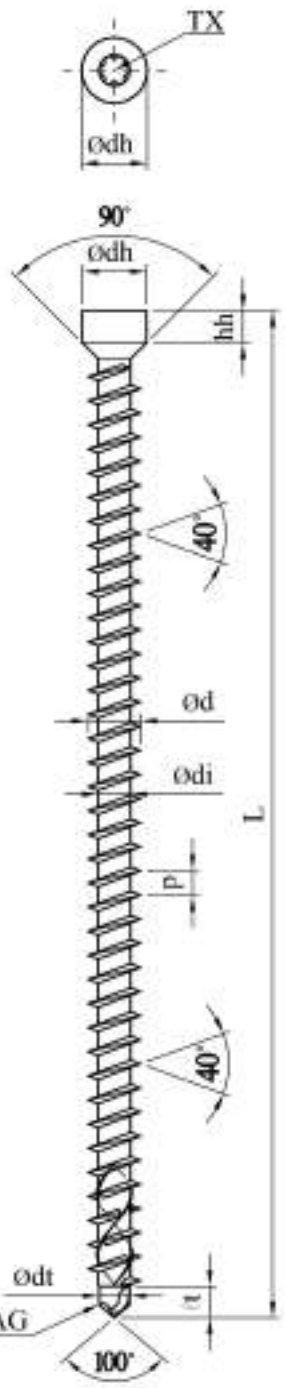

thread-free part

acceptable for:
L< 300 mm with = 3 mm
L≥ 300 mm with = 3x p



tip type rBS DAG

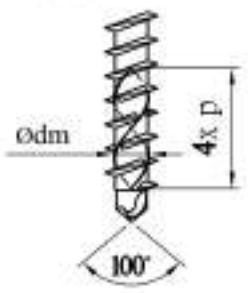

[1] Material specification held on file by ETA Danmark.

Paneltwistec countersunk head 90°
carbon steel[1]
stainless steel hardened[1]

nominal size		Ø3,5	Ø4,0	Ø4,5	Ø5,0	Ø6,0	Ø8,0	Ø10,0	Ø12,0
d	min	3,30	3,75	4,25	4,70	5,75	7,60	9,70	11,50
	max	3,65	4,05	4,55	5,10	6,15	8,20	10,30	12,30
di	min	2,00	2,35	2,60	3,00	3,80	5,10	6,00	6,90
	max	2,25	2,65	2,80	3,45	4,20	5,50	6,50	7,40
dh	min	6,60	7,50	8,50	9,50	11,50	14,10	17,40	19,00
	max	7,00	8,00	9,00	10,00	12,00	14,90	18,20	21,00
hh	min	3,25	3,75	4,15	4,55	5,40	6,50	8,20	8,90
	max	3,65	4,25	4,65	5,05	5,90	7,50	9,20	9,70
p	min	2,02	2,27	2,52	2,79	4,41	5,04	5,94	5,94
	max	2,46	2,77	3,08	3,41	5,39	6,16	7,26	7,26
ds	min	2,20	2,60	2,80	3,60	4,30	5,70	6,90	7,90
	max	2,40	2,80	3,10	3,80	4,50	5,90	7,20	8,20
dm	min	2,65	2,85	3,35	3,75	4,80	6,60	7,90	9,40
	max	2,85	3,05	3,55	3,95	5,00	6,80	8,10	9,80
dc	min	3,50	3,75	5,15	5,75	6,95	7,65	9,60	-
	max	3,70	4,25	5,65	6,25	7,45	8,35	10,40	
hhc	min	3,70	4,00	4,50	5,10	5,40	7,00	8,00	-
	max	3,90	4,40	4,90	5,50	5,80	7,50	8,50	
dh2	min	-	5,30	6,65	8,25	11,00	-	-	-
	max		5,70	7,15	8,75	11,50			
p2	min	-	7,50	8,40	9,30	14,70	16,80	26,40	-
	max		10,00	11,20	12,40	19,60	22,40	33,00	
dm2	min	-	2,70	3,10	3,70	4,50	6,10	7,10	-
	max		2,90	3,30	3,90	4,70	6,30	7,30	
TX	size	TX20	TX20	TX20	TX20	TX30	TX40	TX50	TX50

All dimensions in mm.

	tg +1,0/-1,0							
L	Ø3,5	Ø4,0	Ø4,5	Ø5,0	Ø6,0	Ø8,0	Ø10,0	Ø12,0
25	15	15	-	-	-	-	-	-
30	18	18	-	-	-	-	-	-
40	24	24	24	24	-	-	-	-
45	27	27	27	27	-	-	-	-
50	30	30	30	30	30	-	-	-
60	-	36	36	36	36	-	-	-
70	-	42	42	42	42	-	-	-
80	-	48	48	48	48	48/50*	48/50*	-
90	-	-	-	54	54	54/-*	-	-
100	-	-	-	60	60	60	60	-
110	-	-	-	66	70	80/-*	90/-*	-
120	-	-	-	70	70	80/70*	90/70*	80
140	-	-	-	-	70	80	90/80*	80
160	-	-	-	-	70	80/90*	90	80
180	-	-	-	-	70	80/100*	90/100*	80
200	-	-	-	-	70	80/100*	90/100*	80
+20 mm steps	-	-	-	-	70	80/100*	90/100*	100
300	-	-	-	-	70	80/100*	90/100*	100
320	-	-	-	-	-	80/100*	90/100*	100
+20 mm steps	-	-	-	-	-	80/100*	90/100*	120
400	-	-	-	-	-	80/100*	90/100*	120
420	-	-	-	-	-	80/100*	90/100*	-
440	-	-	-	-	-	80/100*	90/100*	-
460	-	-	-	-	-	80/100*	90/100*	-
480	-	-	-	-	-	80/100*	90/100*	-
500	-	-	-	-	-	80/100*	90/100*	-
550	-	-	-	-	-	80/100*	90/100*	-
600	-	-	-	-	-	80/100*	90/100*	-

All dimensions in mm. * tg for tip types 17 and N / tip type AG and DAG

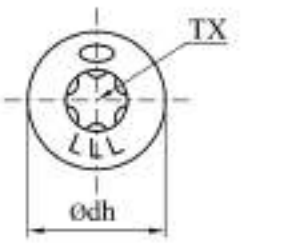

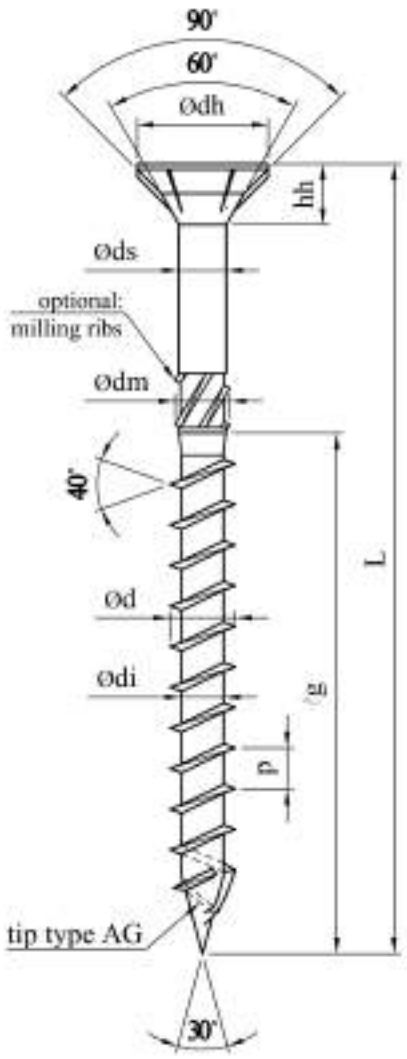

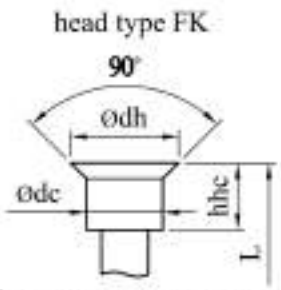

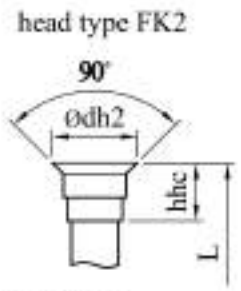





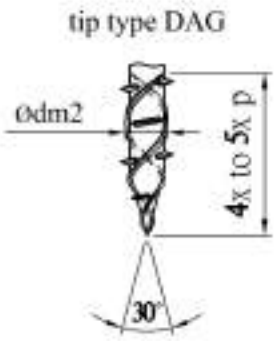

[1] Material specification held on file by ETA Danmark.

Paneltwistec countersunk head 60°
carbon steel[1]
stainless steel hardened[1]

nominal size		Ø3,5	Ø4,0	Ø4,5	Ø5,0	Ø6,0	Ø8,0	Ø10,0
d	min	3,30	3,75	4,25	4,70	5,75	7,60	9,70
	max	3,65	4,05	4,55	5,10	6,15	8,20	10,30
di	min	2,00	2,35	2,60	3,00	3,80	5,10	6,00
	max	2,25	2,65	2,80	3,45	4,20	5,50	6,50
dh	min	4,50	5,50	6,00	6,50	10,00	12,00	15,40
	max	5,50	6,50	8,00	8,00	12,00	14,00	17,40
hh	min	1,75	2,00	2,25	2,50	3,00	n.a.	n.a.
	max	2,10	2,50	2,75	3,00	4,00		
p	min	2,02	2,27	2,52	2,79	4,41	5,04	5,94
	max	2,46	2,77	3,08	3,41	5,39	6,16	7,26
ds	min	2,20	2,60	2,80	3,60	4,50	5,70	6,90
	max	2,40	2,80	3,10	3,80	4,90	5,90	7,20
dm	min	2,65	2,85	3,35	3,75	4,80	6,60	7,90
	max	2,85	3,05	3,55	3,95	5,00	6,80	8,10
dt	min	1,90	2,20	2,40	2,80	3,30	5,10	6,00
	max	2,10	2,40	2,60	3,00	3,50	5,50	6,50
t	min	3,30	3,80	4,30	4,80	4,80	5,00	6,00
	max	3,50	4,00	4,50	5,00	5,00	5,20	6,20
dc	min	3,30	3,75	5,15	5,75	6,95	7,65	9,60
	max	3,70	4,25	5,65	6,25	7,45	8,35	10,40
hhc	min	3,70	4,20	4,70	5,30	5,60	6,00	6,50
	max	3,90	4,40	4,90	5,50	5,80	6,30	6,80
dh2	min	-	5,30	6,65	8,25	11,00	-	-
	max		5,70	7,15	8,75	11,50		
p2	min	-	7,50	8,40	9,30	14,70	16,80	26,40
	max		10,00	11,20	12,40	19,60	22,40	33,00
dm2	min	-	2,70	3,10	3,70	4,50	6,10	7,10
	max		2,90	3,30	3,90	4,70	6,50	7,30
TX	size	TX20	TX20	TX20	TX20	TX30	TX40	TX50

All dimensions in mm.

	g +1,0/-1,0						
L	Ø3,5	Ø4,0	Ø4,5	Ø5,0	Ø6,0	Ø8,0	Ø10,0
25	15	15	-	-	-	-	-
30	18	18	-	-	-	-	-
40	24	24	24	24	-	-	-
45	27	27	27	27	-	-	-
50	30	30	30	30	30	-	-
60	-	36	36	36	36	-	-
70	-	42	42	42	42	-	-
80	-	48	48	48	48	48/50*	48/50*
90	-	-	-	54	54	54/-*	-
100	-	-	-	60	60	60	60
110	-	-	-	66	70	80/-*	90/-*
120	-	-	-	70	70	80/70*	90/70*
140	-	-	-	-	70	80	90/80*
160	-	-	-	-	70	80/90*	90
180	-	-	-	-	70	80/100*	90/100*
200	-	-	-	-	70	80/100*	90/100*
+20 mm steps	-	-	-	-	70	80/100*	90/100*
300	-	-	-	-	70	80/100*	90/100*
320	-	-	-	-	-	80/100*	90/100*
+20 mm steps	-	-	-	-	-	80/100*	90/100*
460	-	-	-	-	-	80/100*	90/100*
480	-	-	-	-	-	80/100*	90/100*
500	-	-	-	-	-	80/100*	90/100*
550	-	-	-	-	-	80/100*	90/100*
600	-	-	-	-	-	80/100*	90/100*

All dimensions in mm. * fg for tip types 17 and N / tip type AG and DAG

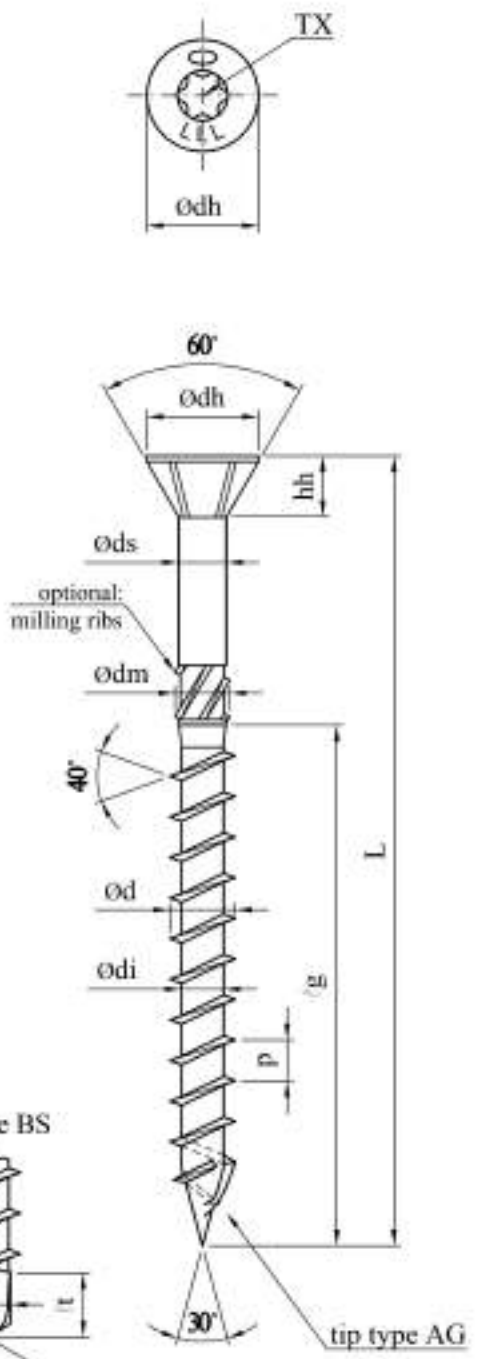

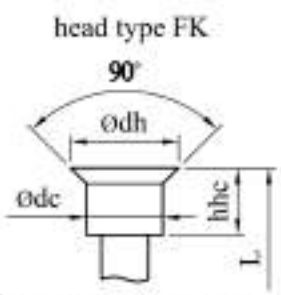

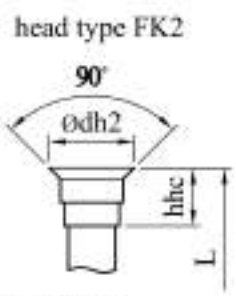

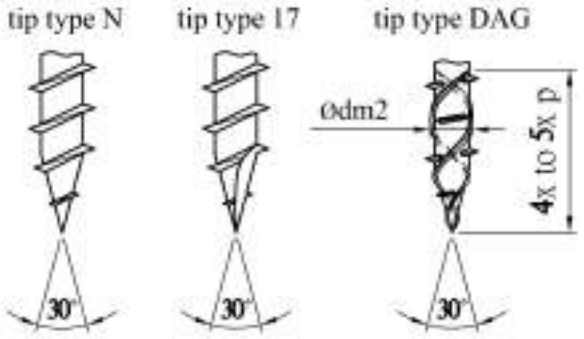

[1] Material specification held on file by ETA Danmark.

Paneltwistec washer head
carbon steel [1]
stainless steel hardened [1]

nominal size		Ø4,0	Ø4,5	Ø5,0	Ø6,0	Ø8,0	Ø10,0
d	min	3,75	4,25	4,70	5,75	7,80	9,70
	max	4,05	4,55	5,10	6,15	8,20	10,30
di	min	2,35	2,60	3,00	3,60	5,10	6,00
	max	2,65	2,80	3,45	4,10	5,50	6,50
dh	min	9,50	10,50	11,50	13,50	21,00	24,00
	max	10,50	11,50	12,50	14,50	23,00	26,00
dc	min	4,50	5,20	5,70	6,40	9,50	11,20
	max	5,10	5,80	6,30	7,00	10,50	12,00
p	min	2,27	2,52	2,79	4,41	5,04	5,94
	max	2,77	3,08	3,41	5,39	6,16	7,26
ds	min	2,50	2,80	3,30	3,80	5,70	6,90
	max	2,90	3,20	3,70	4,50	5,90	7,20
dm	min	2,85	3,35	3,75	4,80	6,60	7,90
	max	3,05	3,55	3,95	5,10	6,80	8,10
p2	min	7,50	8,40	9,30	14,70	16,80	26,40
	max	10,00	11,20	12,40	19,60	22,40	33,00
dm2	min	2,70	3,10	3,70	4,50	6,10	7,10
	max	2,90	3,30	3,90	4,70	6,30	7,30
TX	size	TX20	TX20	TX20	TX30	TX40	TX40

All dimensions in mm.

	lg +1,0/-1,0					
L	Ø4,0	Ø4,5	Ø5,0	Ø6,0	Ø8,0	Ø10,0
25	15	-	-	-	-	-
30	18	-	-	30	-	-
40	24	24	24	40	-	40
45	27	27	27	-	-	-
50	30	30	30	30	-	50
60	36	36	36	36	-	36
70	42	42	42	42	-	-
80	48	48	48	48	48/50*	52/50*
90	-	-	54	54	-	-
100	-	-	60	70/60*	60	80/60*
110	-	-	66	70	-	-
120	-	-	70	70	80/70*	90/70*
130	-	-	-	70	-	-
140	-	-	-	70	80	90/80*
150	-	-	-	70	-	-
160	-	-	-	70	80/90*	90
180	-	-	-	70	80/100*	90/100*
+20 mm steps	-	-	-	70	80/100*	90/100*
300	-	-	-	70	80/100*	90/100*
+20 mm steps	-	-	-	-	80/100*	90/100*
460	-	-	-	-	80/100*	90/100*
480	-	-	-	-	80/100*	90/100*
500	-	-	-	-	80/100*	90/100*
550	-	-	-	-	80/100*	90/100*
600	-	-	-	-	80/100*	90/100*

All dimensions in mm. * lg for tip types 17 and N / tip type AG and DAG

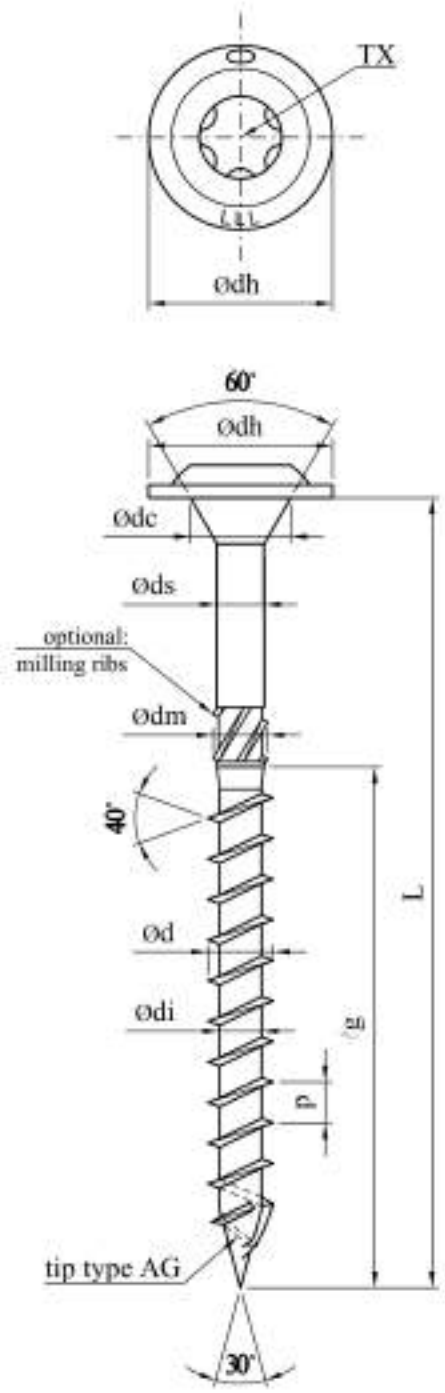

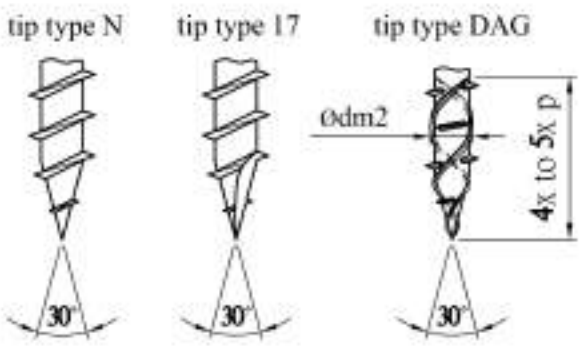

[1] Material specification held on file by ETA Danmark.

Paneltwistec small washer head
carbon steel[1]
stainless steel hardened[1]

nominal size			Ø8,0	
d	min	-	7,80	-
	max	-	8,20	-
di	min	-	5,10	-
	max	-	5,50	-
dh	min	-	17,50	-
	max	-	18,50	-
dc	min	-	7,70	-
	max	-	8,00	-
p	min	-	4,68	-
	max	-	5,72	-
ds	min	-	5,70	-
	max	-	5,90	-
dm	min	-	6,60	-
	max	-	6,80	-
p2	min	-	16,80	-
	max	-	22,40	-
dm2	min	-	6,10	-
	max	-	6,30	-
TX	size	-	TX40	-

All dimensions in mm.

	(g +1,0 -1,0		
L		Ø8,0	
80	-	48/50*	-
100	-	80/60*	-
110	-	-	-
120	-	80/70*	-
130	-	-	-
140	-	80	-
150	-	-	-
160	-	80/90*	-
180	-	80/100*	-
200	-	80/100*	-
+20 mm steps	-	80/100*	-
460	-	80/100*	-

All dimensions in mm.
* dg for tip types 17 and N / tip type AG and DAG

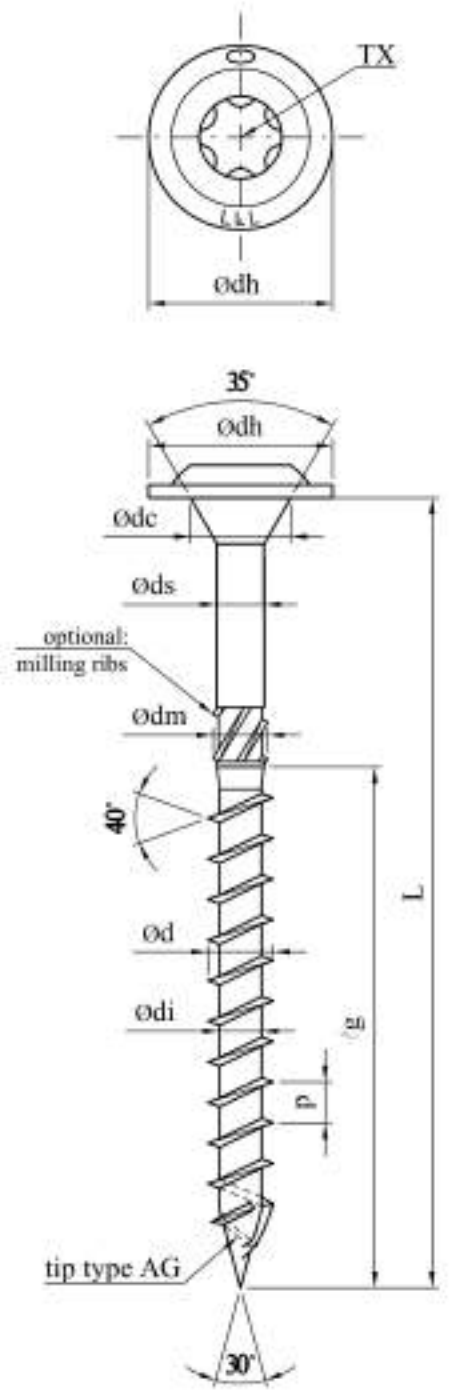

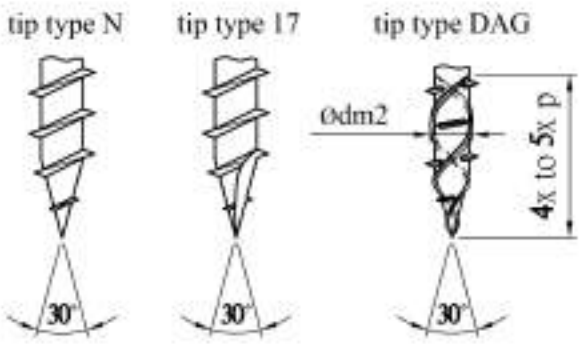

[1] Material specification held on file by ETA Danmark.

Topduo
carbon steel[1]
stainless steel hardened[1]

nominal size			Ø8,0	
d	min max	-	7,60 8,20	-
di	min max	-	5,10 5,50	-
dh	min max	-	15,70 16,30	-
dc	min max	-	7,50 8,50	-
p	min max	-	5,04 6,16	-
ds	min max	-	5,65 5,80	-
dm	min max	-	6,30 6,70	-
dh2	min max	-	14,00 15,00	-
hh2	min max	-	6,50 7,50	-
dh3	min max	-	9,50 10,50	-
hh3	min max	-	6,00 7,00	-
dh4	min max	-	17,50 19,00	-
hh4	min max	-	7,10 7,50	-
dm2	min max	- -	6,00 6,40	- -
TX	size	-	TX40	-

All dimensions in mm.

	lg1 +1,5/-1,5		
L		Ø8,0	
165 +1,5/-2,0	-	80	-
195 +1,5/-2,0	-	100	-
225 +1,5/-3,0	-	100	-
235 +1,5/-3,0	-	100	-
255 +1,5/-3,0	-	100	-
275 +1,5/-3,0	-	100	-
302 +1,5/-4,0	-	100	-
335 +1,5/-4,0	-	100	-
365 +1,5/-4,0	-	100	-
397 +1,5/-4,0	-	100	-
435 +1,5/-4,9	-	100	-
472 +1,5/-4,9	-	100	-

All dimensions in mm.

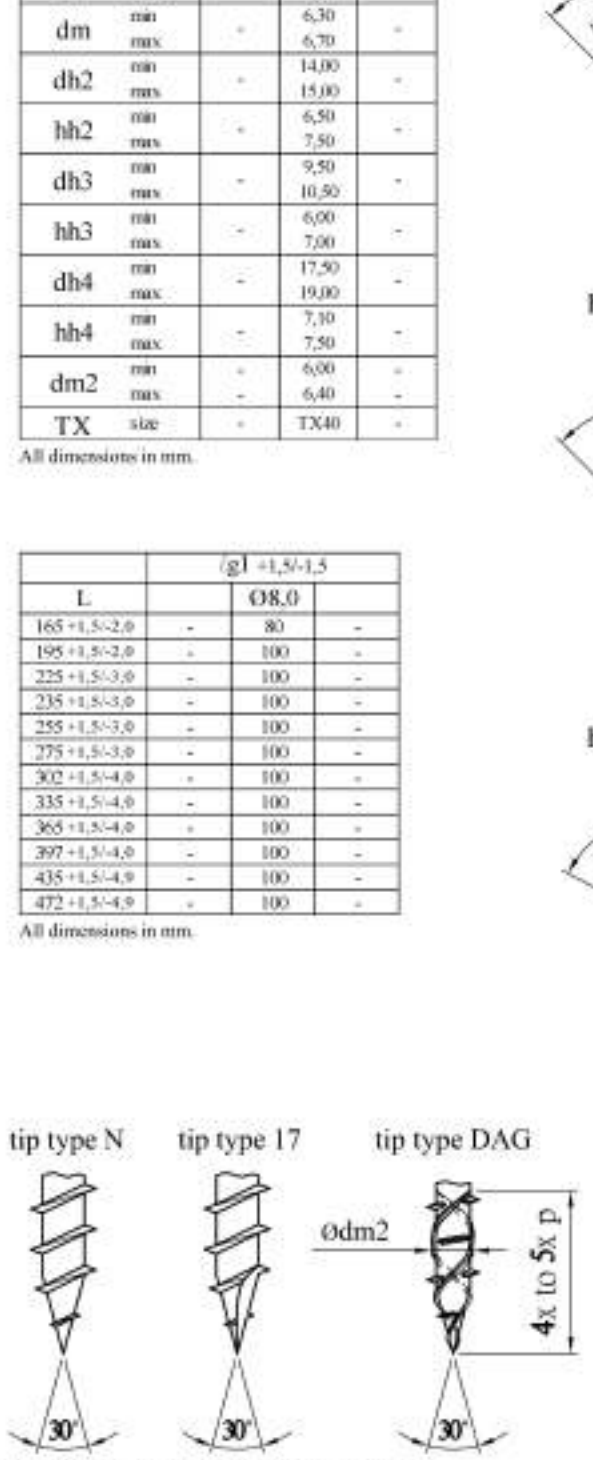

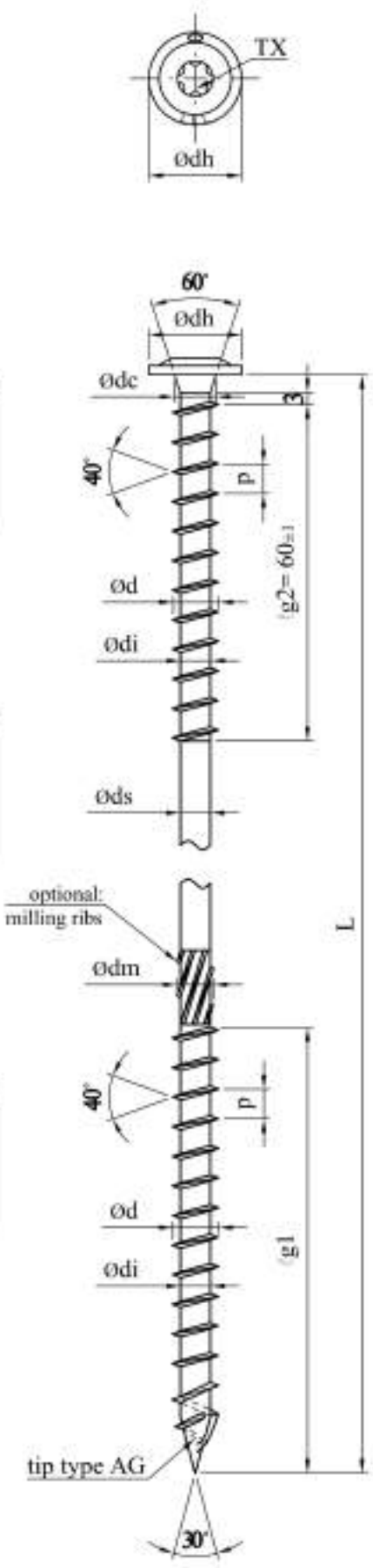
TX
Ødh
60°
Ødh
Ødc
3
40°
P
lg2= 60±1
Ød
Ødi
Ødm

Terrassotec, S-L-SP, SP FK
carbon steel [1]
stainless steel hardened [1]

Terrassotec, S-L-SP FK

nominal size		Ø3,5	Ø4,0	Ø4,5	Ø5,0	Ø6,0
d	min	3,30	3,90	4,30	4,70	5,75
	max	3,65	4,10	4,60	5,10	6,15
di	min	2,00	2,40	2,60	3,00	3,70
	max	2,25	2,60	2,80	3,45	4,15
dh	min	4,50	5,50	6,00	6,70	11,00
	max	5,50	6,50	8,00	8,70	12,00
dc	min	3,40	3,90	5,30	5,80	7,00
	max	3,60	4,10	5,50	6,20	7,40
hh	min	1,75	4,10	4,60	5,20	5,40
	max	2,10	4,40	4,90	5,50	5,80
β	countersunk angle	90°	90°	90°	90°	90°
p	min	2,02	2,25	2,52	2,79	3,24
	max	2,46	2,75	3,08	3,41	3,96
ds	min	2,20	2,60	2,80	3,55	4,20
	max	2,40	2,90	3,20	3,80	4,50
dm	min	2,70	3,20	3,70	3,90	4,90
	max	3,10	3,60	4,10	4,10	5,10
dh2	min	-	4,00	4,50	5,10	5,40
	max		4,40	4,90	5,50	5,80
hh2	min	-	5,30	6,65	8,25	11,00
	max		5,70	7,15	8,75	11,50
p2	min	-	-	-	-	-
	max					
dm2	min	-	-	-	-	-
	max					
TX	size	TX10	TX15	TX20	TX25	TX30

SP FK

Ø6,0	Ø8,0	Ø10,0
5,75	7,60	9,70
6,15	8,20	10,30
3,80	5,10	6,00
4,20	5,50	6,50
13,00	17,50	22,00
14,00	19,00	23,00
6,20	9,85	10,50
6,80	10,65	11,50
5,80	7,00	8,10
6,20	7,40	8,50
125°	125°	125°
4,41	5,04	5,94
5,39	6,16	7,26
4,30	5,50	6,70
4,60	5,90	7,15
4,50	6,40	7,50
4,90	6,80	7,90
-	-	-
-	-	-
14,70	16,80	26,40
19,60	22,40	33,00
4,50	6,10	7,10
4,70	6,30	7,30
TX30	TX40	TX40

All dimensions in mm.

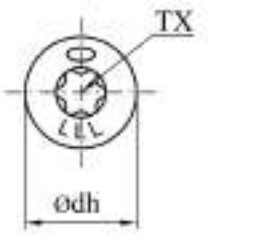

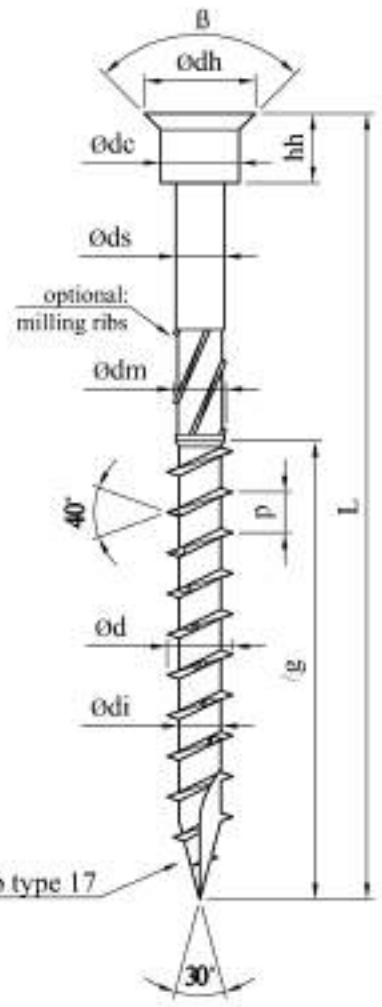

Terrassotec, S-L-SP FK

L	lg +1,0/-1,0				
	Ø3,5	Ø4,0	Ø4,5	Ø5,0	Ø6,0
30	18	18	18	-	-
35	21	21	21	-	-
40	24	24	24	-	-
45	27	27	27	26	26
50	30	30	30	30	30
60	-	35	35	35	35
70	-	40	40	40	40
80	-	50	50	50	50
90	-	55	55	55	55
100	-	60/70*	60	60	60
110	-	70	65	65	60
120	-	70	70	70	60
130	-	70	70	70	70
140	-	70	70	70	70
150	-	-	-	-	70
160	-	-	-	-	70

All dimensions in mm.
* lg for Terrassotec/S-L-SP FK

SP FK

L	lg +1,0/-1,0		
	Ø6,0	Ø8,0	Ø10,0
70	42	50	50
80	48	60	60
90	54	70	70
100	60	80	80
120	70	90	90
140	70	100	100
160	70	100	100
180	70	100	100
200	70	100	100
220	70	100	100
240	70	100	100
260	70	100	100
280	70	100	100
300	70	100	100
320	-	100	100
340	-	100	100
360	-	100	100
380	-	100	100
400	-	100	100
450	-	100	100
500	-	100	100
550	-	-	100
600	-	-	100

All dimensions in mm.

head type FK2

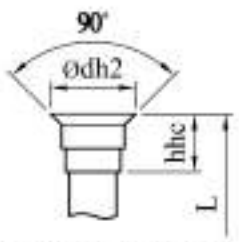

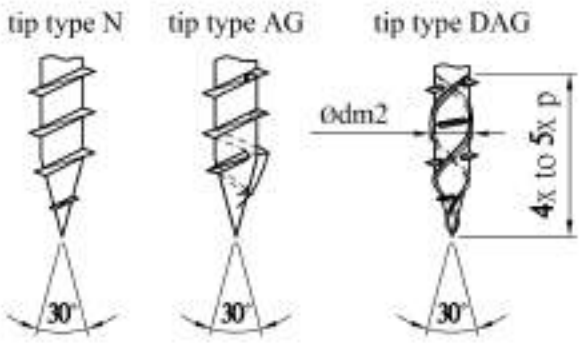

[1] Material specification held on file by ETA Danmark.

Speedo
carbon steel[1]

nominal size		Ø3,5	Ø4,0	Ø4,5	Ø5,0	Ø6,0	Ø8,0	Ø10,0
d	min	3,35	3,75	4,25	4,70	5,85	7,60	9,80
	max	3,65	4,15	4,65	5,15	6,15	8,20	10,20
di	min	2,00	2,30	2,55	3,00	3,75	5,20	6,30
	max	2,25	2,65	2,75	3,45	4,00	5,50	6,40
dh	min	6,60	7,50	8,50	9,50	11,50	14,00	17,60
	max	7,00	8,40	9,00	10,00	12,00	15,00	18,40
hh	min	3,25	3,75	4,15	5,30	5,40	6,75	8,40
	max	3,80	4,35	4,65	5,90	5,90	7,25	9,00
p	min	2,02	2,27	2,52	2,79	4,41	5,85	5,58
	max	2,46	2,77	3,08	3,41	5,39	7,15	6,82
ds	min	2,20	2,60	2,80	3,60	4,20	5,60	6,95
	max	2,50	2,85	3,20	3,80	4,30	5,70	7,05
dm	min	2,50	2,90	3,40	3,80	4,40	6,60	7,80
	max	2,80	3,25	3,60	4,00	5,00	6,90	8,10
dm2	min	2,50	2,95	3,20	3,80	4,30	5,95	7,20
	max	2,80	3,25	3,50	4,00	4,50	6,05	7,40
hm2	min	2,40	2,40	2,90	2,90	4,90	5,60	7,00
	max	2,60	2,60	3,10	3,10	5,10	5,80	7,70
dh2	min	-	-	-	-	13,50	20,50	24,00
	max					14,50	22,50	26,00
TX	size	TX20	TX20	TX25	TX25	TX30	TX40	TX40

All dimensions in mm.

	g +1,0/-1,0						
L	Ø3,5	Ø4,0	Ø4,5	Ø5,0	Ø6,0	Ø8,0	Ø10,0
30	full	full	full	-	-	-	-
35	21	21	21	-	-	-	-
40	26,5	26,5	26,5	26,5	-	-	-
45	29,5	29,5	29,5	29,5	-	-	-
50	32,5	32,5	32,5	32,5	32,5	-	-
60	-	38,5	38,5	38,5	38,5	-	-
70	-	44,5	44,5	44,5	44,5	-	-
80	-	50,5	50,5	50,5	50,5	52	52
90	-	-	-	62,5	62,5	52	52
100	-	-	-	62,5	62,5	52	60
110	-	-	-	74,5	-	52	60
120	-	-	-	74,5	80	52	87
130	-	-	-	-	80	-	-
140	-	-	-	-	80	100	100
150	-	-	-	-	80	100	100
160	-	-	-	-	80	100	100
180	-	-	-	-	80	100	100
200	-	-	-	-	80	100	100
+20 mm steps	-	-	-	-	-	100	100
460	-	-	-	-	-	100	100
480	-	-	-	-	-	100	100
500	-	-	-	-	-	100	100
550	-	-	-	-	-	100	100
600	-	-	-	-	-	100	100

All dimensions in mm.

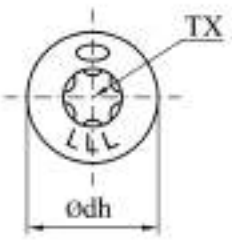

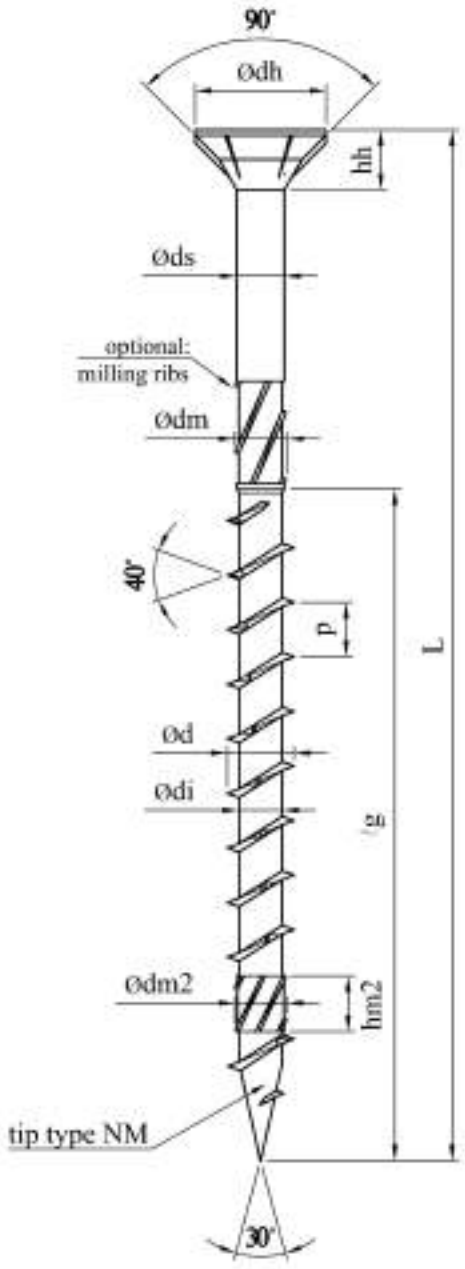

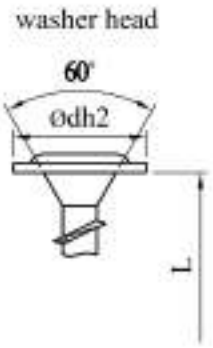

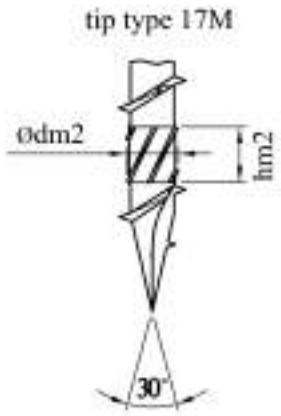

[1] Material specification held on file by ETA Danmark.

Speedo 4K
carbon steel[1]

nominal size		Ø3,5	Ø4,0	Ø4,5	Ø5,0	Ø6,0	Ø8,0	Ø10,0
d	min	3,35	3,75	4,25	4,70	5,75	7,60	9,70
	max	3,65	4,15	4,55	5,10	6,15	8,20	10,30
di	min	2,00	2,35	2,60	3,00	3,80	5,10	6,00
	max	2,25	2,65	2,80	3,45	4,20	5,50	6,50
dh	min	6,60	7,50	8,50	9,50	11,50	14,15	17,40
	max	7,00	8,00	9,00	10,00	12,00	14,85	18,20
hh	min	3,25	3,75	4,15	4,55	5,40	6,50	8,20
	max	3,65	4,25	4,65	5,05	5,90	7,50	9,20
p	min	2,02	2,25	2,52	2,79	4,41	5,04	5,94
	max	2,46	2,75	3,08	3,41	5,39	6,16	7,26
ds	min	2,20	2,60	2,80	3,60	4,30	5,70	6,90
	max	2,40	2,80	3,10	3,80	4,50	5,90	7,10
dm	min	2,70	2,90	3,40	3,80	4,80	6,60	7,90
	max	2,80	3,00	3,50	3,90	5,00	6,80	8,10
dh2	min	-	-	-	-	13,50	21,00	24,00
	max					14,50	23,00	26,00
e	min	2,35	2,70	3,00	3,35	4,05	5,50	6,85
	max	2,55	2,90	3,30	3,65	4,25	5,70	7,05
h4K	min	2,40	2,40	2,90	2,90	2,90	3,40	3,90
	max	2,60	2,60	3,10	3,10	3,10	3,60	4,10
TX	size	TX20	TX20	TX25	TX25	TX30	TX40	TX40

All dimensions in mm.

	g +1,0/-1,0						
L	Ø3,5	Ø4,0	Ø4,5	Ø5,0	Ø6,0	Ø8,0	Ø10,0
30	18	18	-	-	-	-	-
40	24	24	24	24	28	-	-
45	24	24	24	-	-	-	-
50	30	30	30	30	30	-	-
60	-	36	36	36	36	-	-
70	-	42	42	42	42	-	-
80	-	48	48	48	48	50	50
90	-	-	-	54	54	55	-
100	-	-	-	60	60	60	60
110	-	-	-	-	60	-	-
120	-	-	-	70	70	70	70
130	-	-	-	-	70	-	-
140	-	-	-	-	70	70	70
150	-	-	-	-	70	-	-
160	-	-	-	-	70	70	70
180	-	-	-	-	80	80	80
200	-	-	-	-	90	90	90
220	-	-	-	-	90	100	100
+20 mm steps	-	-	-	-	90	100	100
300/500/400*	-	-	-	-	90	100	100

All dimensions in mm.
* max. L for d= 6,0/8,0/10,0 mm

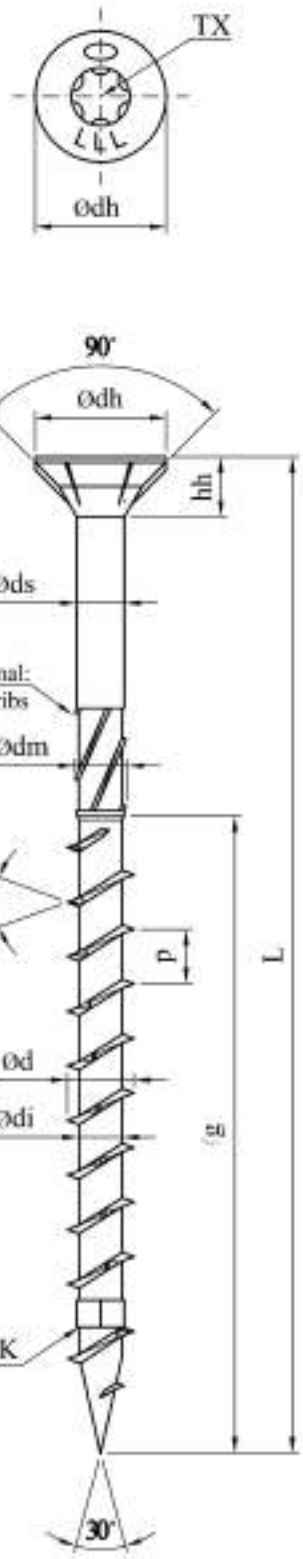

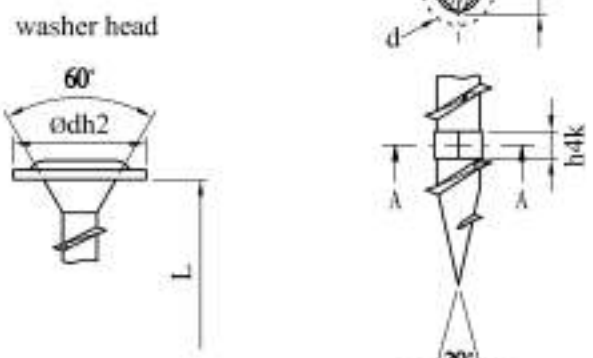

[1] Material specification held on file by ETA Danmark.

Hobotec, Hapatec, Paneltwistec V4A countersunkhead 90°

carbon steel[1]
stainless steel hardened[1]
stainless steel unhardened[1]

nominal size		Ø3,5	Ø4,0	Ø4,5	Ø5,0	Ø6,0
d	min	3,40	3,85	4,35	4,85	5,80
	max	3,70	4,20	4,70	5,20	6,20
di	min	2,00	2,30	2,50	2,90	3,50
	max	2,25	2,60	2,80	3,40	3,80
dh	min	6,30	7,25	8,25	9,20	11,15
	max	7,50	8,50	9,50	10,50	12,00
hh	min	3,70	4,20	4,70	5,30	5,60
	max	3,90	4,40	4,90	5,50	5,80
p	min	1,44	1,62	1,80	1,98	2,34
	max	1,76	1,98	2,20	2,42	2,86
ds	min	2,20	2,70	2,80	3,50	3,80
	max	2,50	2,90	3,20	3,80	4,20
dm	min	2,80	3,40	3,80	3,90	4,50
	max	3,00	3,60	4,00	4,10	4,70
dt	min	1,90	2,20	2,40	2,80	3,30
	max	2,10	2,40	2,60	3,20	3,50
t	min	3,30	3,80	4,30	3,50	4,80
	max	3,50	4,00	4,50	5,00	5,00
dc	min	3,30	3,75	5,15	5,75	6,95
	max	3,70	4,25	5,65	6,25	7,45
dh2	min	-	4,00	4,50	5,10	5,40
	max		4,40	4,90	5,50	5,80
hh2	min	-	5,30	6,65	8,25	11,00
	max		5,70	7,15	8,75	11,50
TX	size	TX10	TX15	TX20	TX25	TX25

All dimensions in mm.

	g =1,0/-1,0				
L	Ø3,5	Ø4,0	Ø4,5	Ø5,0	Ø6,0
25	18	-	-	-	-
30	21	21	21	21	21
35	24	24	24	24	24
40	26	26	26	26	26
45	28	28	28	28	28
50	30	30	30	30	30
60	-	36	36	36	36
70	-	42	42	42	42
80	-	48	48	48	48
90	-	-	-	54	54
100	-	-	-	60	60
110	-	-	-	60	60
120	-	-	-	60	60
130	-	-	-	-	70
140	-	-	-	-	70
150	-	-	-	-	70
160	-	-	-	-	70
180	-	-	-	-	70
200	-	-	-	-	70
+20 mm steps	-	-	-	-	70
300	-	-	-	-	70

All dimensions in mm.

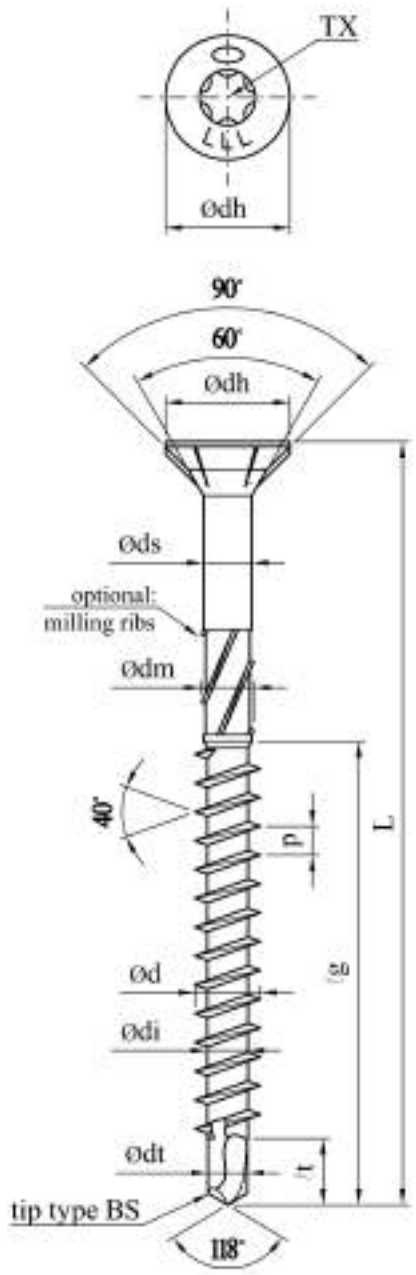

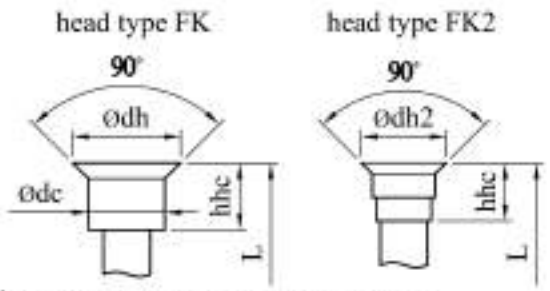

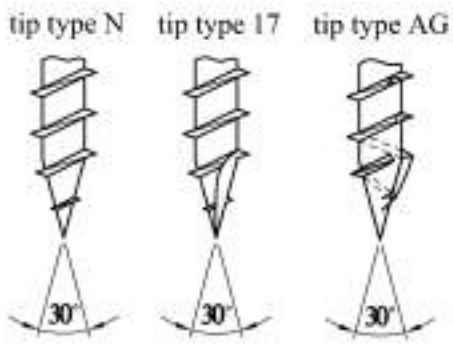

[1] Material specification held on file by ETA Danmark.

Hobotec, Hapatec, Paneltwistec V4A countersunkhead 60°

carbon steel[1]
stainless steel hardened[1]
stainless steel unhardened[1]

nominal size		Ø3,5	Ø4,0	Ø4,5	Ø5,0	Ø6,0
d	min	3,40	3,85	4,35	4,85	5,80
	max	3,70	4,20	4,70	5,20	6,20
di	min	2,00	2,30	2,50	2,90	3,50
	max	2,25	2,60	2,80	3,40	3,80
dh	min	4,50	5,50	6,00	6,50	10,00
	max	5,50	6,50	8,00	8,50	12,00
hh	min	3,70	4,20	4,70	5,30	5,60
	max	3,90	4,40	4,90	5,50	5,80
p	min	1,44	1,62	1,80	1,98	2,34
	max	1,76	1,98	2,20	2,42	2,86
ds	min	2,20	2,70	2,80	3,50	3,80
	max	2,50	2,90	3,20	3,80	4,20
dm	min	2,80	3,40	3,80	3,90	4,50
	max	3,00	3,60	4,00	4,10	4,70
dt	min	1,90	2,20	2,40	2,80	3,30
	max	2,10	2,40	2,60	3,20	3,50
t	min	3,30	3,80	4,30	3,50	4,80
	max	3,50	4,00	4,50	5,00	5,00
dc	min	3,30	3,75	5,15	5,75	6,95
	max	3,70	4,25	5,65	6,25	7,45
dh2	min	-	4,00	4,50	5,10	5,40
	max		4,40	4,90	5,50	5,80
hh2	min	-	5,30	6,65	8,25	11,00
	max		5,70	7,15	8,75	11,50
TX	size	TX10	TX15	TX20	TX25	TX25

All dimensions in mm.

	g =1,0/-1,0				
L	Ø3,5	Ø4,0	Ø4,5	Ø5,0	Ø6,0
25	18	-	-	-	-
30	21	21	21	21	21
35	24	24	24	24	24
40	26	26	26	26	26
45	28	28	28	28	28
50	30	30	30	30	30
60	-	36	36	36	36
70	-	42	42	42	42
80	-	48	48	48	48
90	-	-	-	54	54
100	-	-	-	60	60
110	-	-	-	60	60
120	-	-	-	60	60
130	-	-	-	-	70
140	-	-	-	-	70
150	-	-	-	-	70
160	-	-	-	-	70
180	-	-	-	-	70
200	-	-	-	-	70
+20 mm steps	-	-	-	-	70
300	-	-	-	-	70

All dimensions in mm.

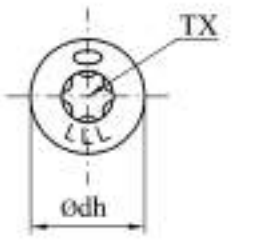

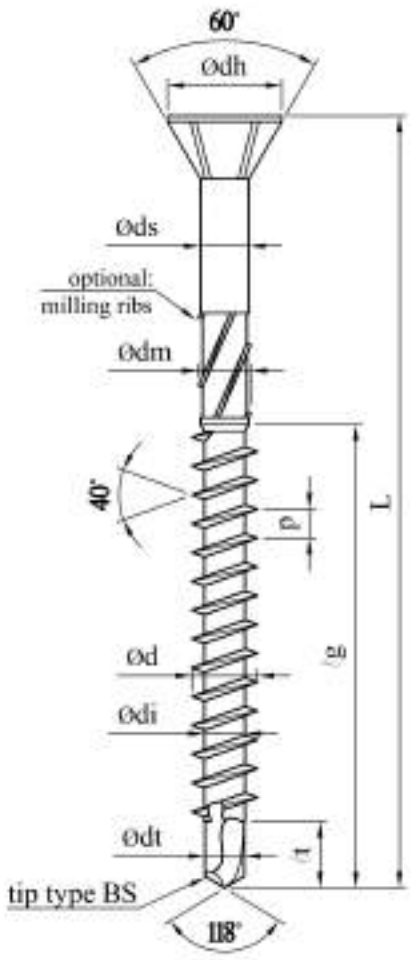

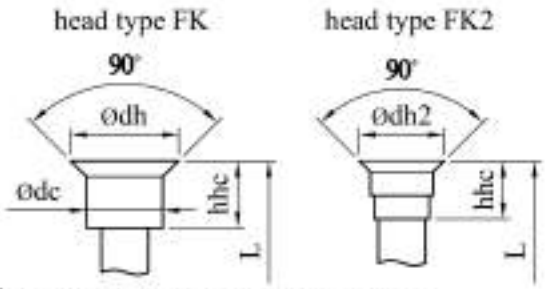

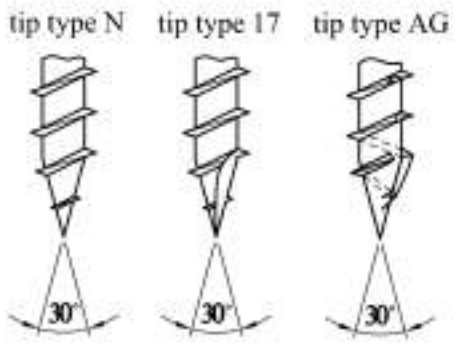

[1] Material specification held on file by ETA Danmark.

SP ZK
carbon steel[1]

nominal size		Ø6,0	Ø8,0	Ø10,0
d	min	5,85	7,80	9,70
	max	6,15	8,20	10,30
di	min	3,70	5,00	6,00
	max	4,10	5,40	6,50
dh	min	13,00	16,60	20,50
	max	13,80	17,40	21,50
hh	min	3,40	3,80	4,50
	max	3,80	4,20	5,10
p	min	4,41	5,04	5,94
	max	5,39	6,16	7,26
ds	min	4,20	5,60	6,80
	max	4,40	5,80	7,00
dm	min	4,50	6,40	7,70
	max	4,90	6,80	8,10
TX	size	TX30	TX40	TX40

All dimensions in mm.

	g +1,0/-1,0		
L	Ø6,0	Ø8,0	Ø10,0
50	30	-	-
60	36	-	-
70	42	-	-
80	48	50	50
90	54	-	-
100	60	60	60
110	70	-	-
120	70	70	70
130	70	-	-
140	70	80	80
150	70	-	-
160	70	90	90
180	70	100	100
+20 mm steps	70	100	100
300	70	100	100
+20 mm steps	-	100	100
400	-	100	100

All dimensions in mm.

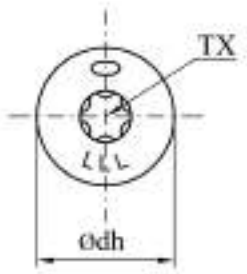

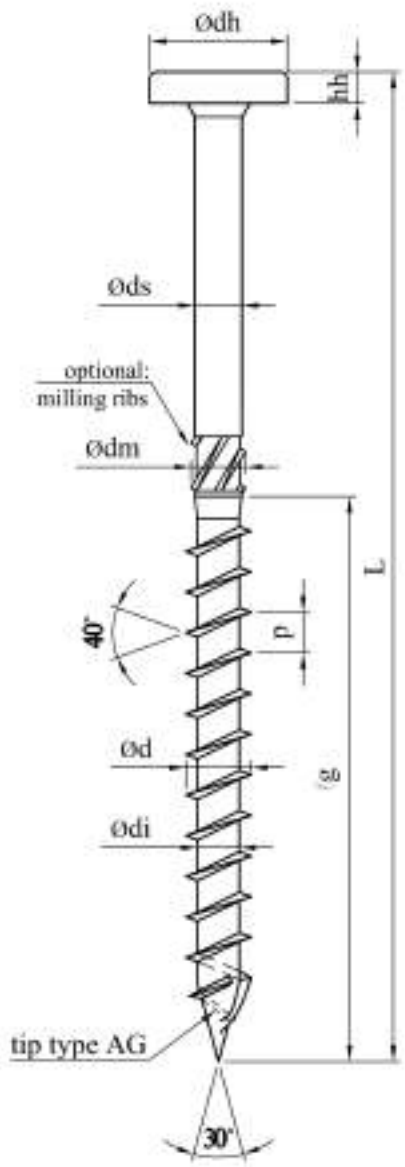

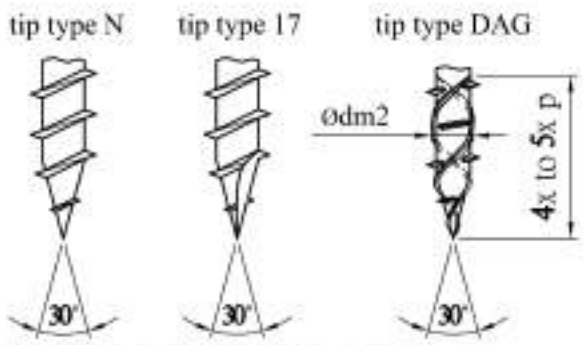

[1] Material specification held on file by ETA Danmark.

Ecotec countersunk head 90°
carbon steel[1]
stainless steel unhardened[1]

nominal size		Ø3,5	Ø4,0	Ø4,5	Ø5,0	Ø6,0
d	min	3,40	3,85	4,35	4,85	5,80
	max	3,70	4,20	4,70	5,20	6,20
di	min	2,00	2,30	2,50	2,90	3,50
	max	2,25	2,60	2,80	3,40	3,80
dh	min	6,30	7,25	8,25	9,20	11,15
	max	7,50	8,50	9,50	10,50	12,00
hh	min	3,70	4,20	4,70	5,30	5,60
	max	3,90	4,40	4,90	5,50	5,80
p	min	1,44	1,62	1,80	1,98	2,34
	max	1,76	1,98	2,20	2,42	2,86
ds	min	2,20	2,70	2,80	3,50	3,80
	max	2,50	2,90	3,20	3,80	4,20
dm	min	2,80	3,40	3,80	3,90	4,50
	max	3,00	3,60	4,00	4,10	4,70
TX	size	TX20	TX20	TX20	TX20	TX30

All dimensions in mm.

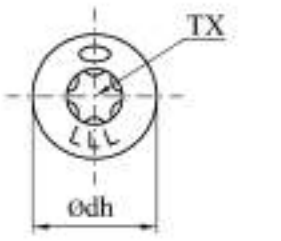

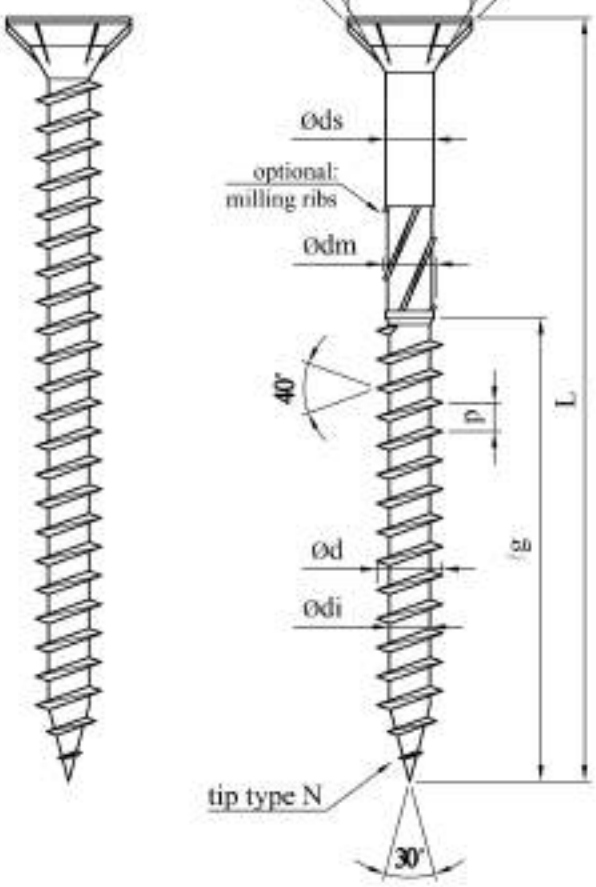

Ecotec partially threaded

	g =1,0/-1,0				
L	Ø3,5	Ø4,0	Ø4,5	Ø5,0	Ø6,0
35	21	-	-	-	-
40	23	23	23	23	-
45	25	25	25	25	-
50	30	30	30	30	30
60	-	39	39	39	39
70	-	44	44	44	44
80	-	44	44	44	44
90	-	-	-	54	54
100	-	-	-	54	60
120	-	-	-	70	70
140	-	-	-	-	70
+20 mm steps	-	-	-	-	70
300	-	-	-	-	70

All dimensions in mm.

Ecotec fully threaded

L	Ø3,5	Ø4,0	Ø4,5	Ø5,0	Ø6,0
15	x	x	-	-	-
20	x	x	x	x	-
25	x	x	x	x	x
30	x	x	x	x	x
35	-	x	x	x	x
40	-	x	x	x	x
45	-	x	x	x	x
50	-	x	x	x	x
60	-	-	-	x	x
70	-	-	-	-	x

All dimensions in mm.

[1] Material specification held on file by ETA Danmark.

WBS - Winkelbeschlagsschraube
carbon steel[1]

nominal size		Ø5,0
d	min	4,75
	max	4,95
di	min	3,90
	max	3,40
dh	min	7,00
	max	7,40
hh	min	2,00
	max	3,00
p	min	1,98
	max	2,42
dc	min	4,60
	max	4,90
TX	size	TX20

All dimensions in mm.

	g +1,0/-1,0
L	Ø5,0
25	16
30	21
35	26
40	31
50	41
60	51
70	61

All dimensions in mm.

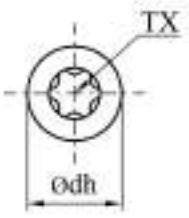

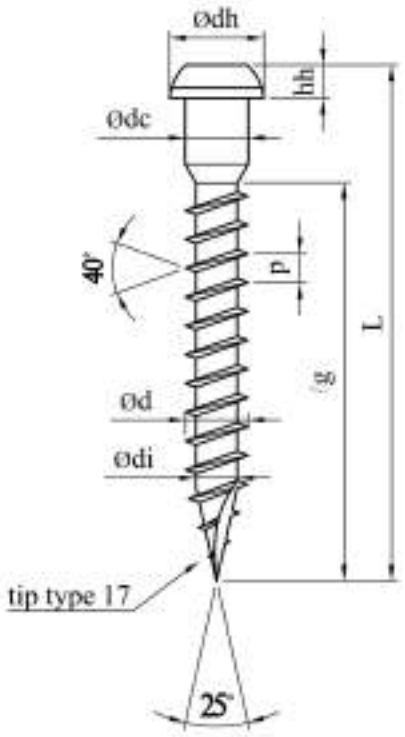

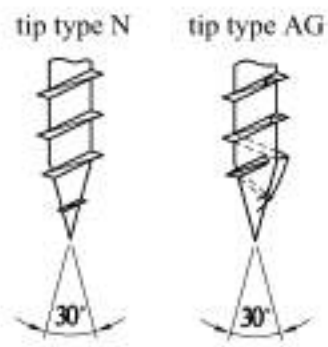

[1] Material specification held on file by ETA Danmark.

VSS - Verbinder-Systemschraube
carbon steel[1]
for Ø5,0 also stainless steel unhardened and special coated [1]

nominal size		Ø4,0	Ø5,0		Ø6,0	Ø8,0
d	min	3,75	4,70		5,75	7,60
	max	4,20	5,20		6,20	8,20
di	min	2,25	3,00		3,70	5,10
	max	2,65	3,45		4,20	5,50
dh	min	5,25	7,80		9,25	11,75
	max	5,75	8,30		9,75	12,25
hh	min	4,00	5,40		6,50	8,60
	max	4,40	5,80		6,90	9,00
p	min	2,27	2,79	2,00*	4,41	5,04
	max	2,77	3,41	2,40*	5,39	6,16
dc	min	3,75	4,75		5,75	7,75
	max	4,25	5,25		6,25	8,25
p2	min	7,50	9,30	-**	14,70	16,80
	max	10,00	12,40		19,60	22,40
dm2	min	2,70	3,70	-**	4,50	6,10
	max	2,90	3,90		4,70	6,30
TX	size	TX15	TX20		TX25	TX30

All dimensions in mm.
* p for Ø5,0 stainless steel unhardened
** not for stainless steel unhardend

L	Ø4,0	Ø5,0	Ø6,0	Ø8,0
30	x	-	-	-
40	-	x	-	-
60	x	x	x	-
80	-	x	x	-
90	-	-	-	x
100	-	-	x	-
120	-	-	-	x

All dimensions in mm.

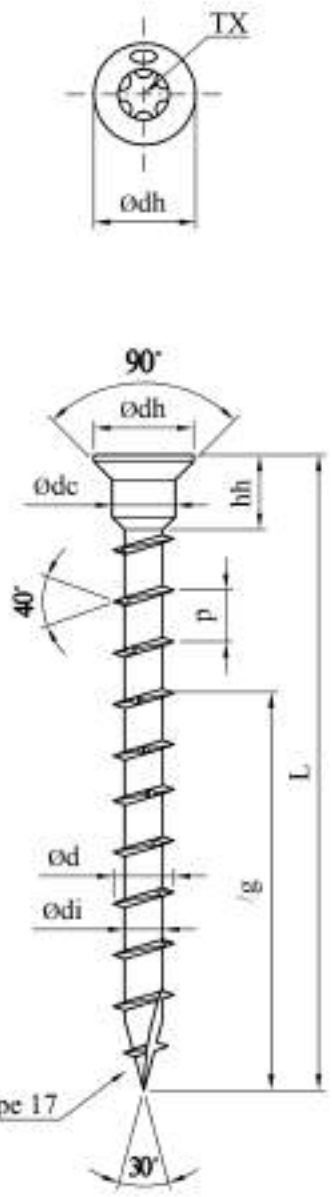

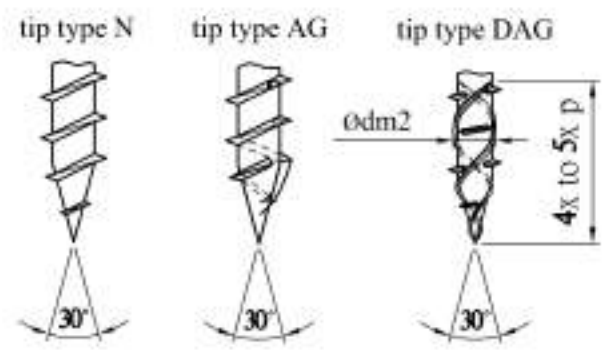

[1] Material specification held on file by ETA Danmark.

Speedo ZK
carbon steel[1]

nominal size		Ø4,0	Ø4,5	Ø5,0	Ø6,0	Ø8,0	Ø10,0
d	min	3,75	4,25	4,70	5,75	7,60	9,70
	max	4,05	4,55	5,10	6,15	8,20	10,30
di	min	2,35	2,60	3,00	3,80	5,10	6,00
	max	2,65	2,80	3,45	4,20	5,50	6,50
dh	min	8,00	9,00	10,00	12,50	17,50	21,50
	max	9,00	10,00	11,00	13,50	18,50	22,50
hh	min	1,30	1,40	1,90	2,00	2,20	2,70
	max	2,00	2,20	2,70	2,80	3,00	3,50
p	min	2,27	2,52	2,79	4,41	5,04	5,94
	max	2,77	3,08	3,41	5,39	6,16	7,26
ds	min	2,60	2,80	3,60	4,30	5,70	6,90
	max	2,80	3,10	3,80	4,50	5,90	7,20
dm	min	2,70	3,10	3,70	4,50	6,10	7,10
	max	2,90	3,30	3,90	4,70	6,30	7,30
p2	min	7,50	8,40	9,30	14,70	16,80	26,40
	max	10,00	11,20	12,40	19,60	22,40	33,00
TX	size	TX15	TX20	TX25	TX30	TX40	TX50

All dimensions in mm.

	lg +1,0/-1,0					
L	Ø4,0	Ø4,5	Ø5,0	Ø6,0	Ø8,0	Ø10,0
30	18	18	-	-	-	-
40	24	24	24	-	-	-
45	27	27	27	-	-	-
50	30	30	30	30	-	-
60	36	36	36	36	-	-
70	42	42	42	42	-	-
80	48	48	48	48	48	48
90	-	-	54	54	54	54
100	-	-	60	60	60	60
110	-	-	66	66	66	66
120	-	-	70	70	95	95
140	-	-	-	70	95	95
160	-	-	-	70	95	95
180	-	-	-	70	95	95
200	-	-	-	70	95	95
+20 mm steps	-	-	-	70	95	95
300	-	-	-	70	95	95
320	-	-	-	-	95	95
+20 mm steps	-	-	-	-	95	95
500	-	-	-	-	95	95
550	-	-	-	-	95	95
600	-	-	-	-	95	95

All dimensions in mm.

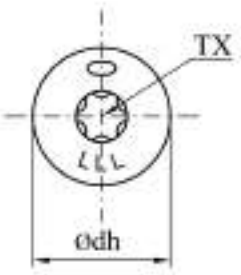

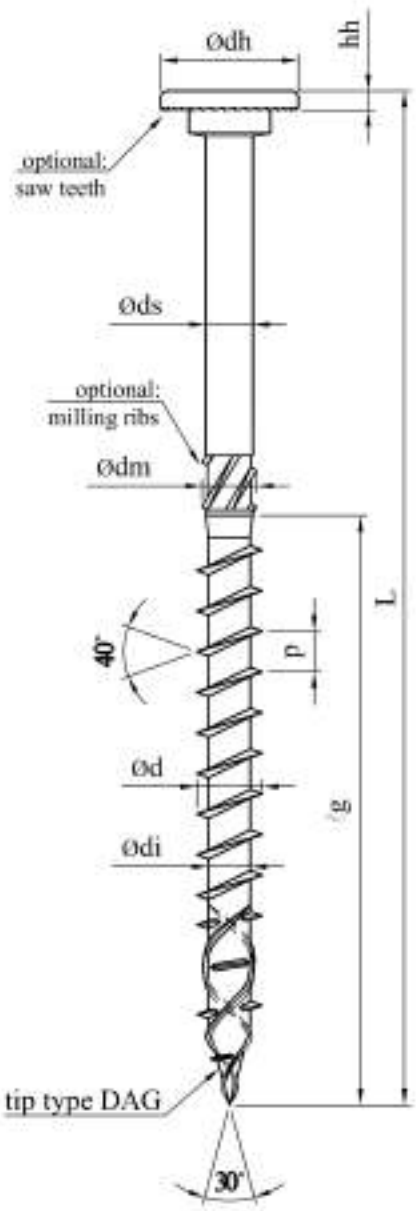

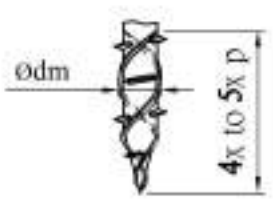

[1] Material specification held on file by ETA Danmark.

FBAS
stainless steel unhardened [1]

nominal size		Ø4,8	Ø5,5
d	min	4,65	5,20
	max	4,90	5,50
di	min	3,05	3,15
	max	3,25	3,45
dh	min	11,50	11,50
	max	12,50	12,50
hh	min	2,50	2,50
	max	2,85	2,85
p	min	2,00	2,30
	max	2,20	2,50
dS	min	3,65	3,85
	max	3,95	4,15
α	thread angle	60°	40°
TX	size	TX20	TX20

All dimensions in mm.

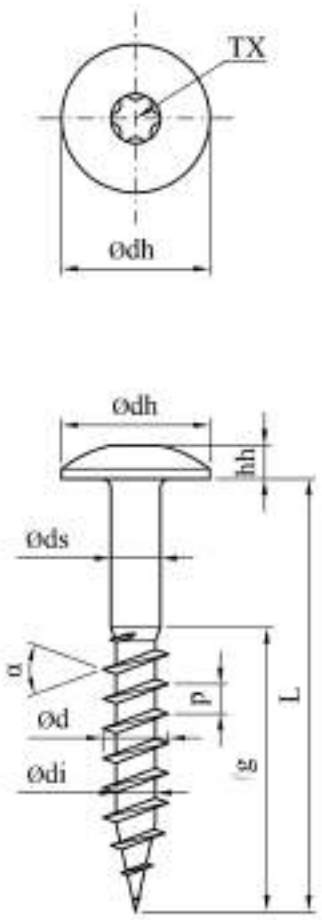

	l_g +1,0/-1,0	
L	Ø4,8	Ø5,5
25	18	18
30	20	20
32	23	23
35	23	23
38	27	27
60	48	48

All dimensions in mm.

[1] Material specification held on file by ETA Danmark.

Brutus
carbon steel[1]

nominal size		Ø16,0
d	min	15,40
	max.	16,20
di	min	11,40
	max.	12,20
p	min	5,50
	max.	6,50

All dimensions in mm.

L
Ø16,0
3000 -15,0/+5,0

All dimensions in mm.
Threaded rod may be cut to length.

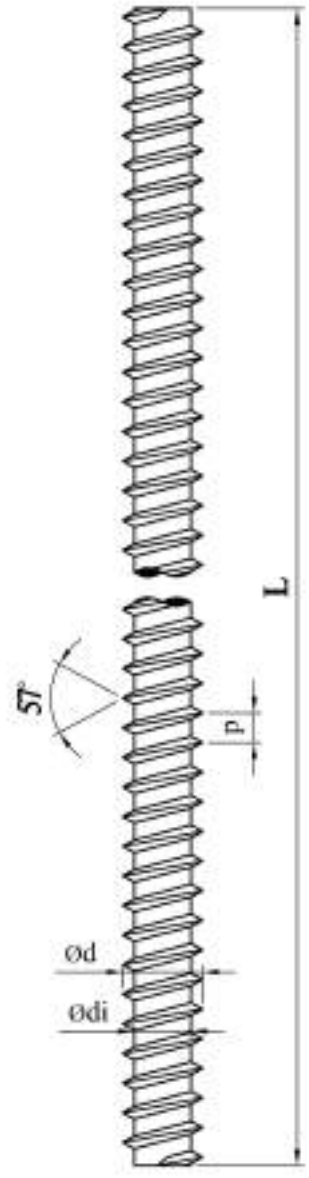

[1] Material specification held on file by ETA Danmark.

Washer
carbon steel[1]

Washer for countersunk head 90°

nominal size		Ø5,0	Ø6,0	Ø8,0	Ø10,0
d	min	5,35	7,70	8,70	11,60
	max	5,85	8,30	9,30	12,40
da	min	15,50	19,50	24,50	31,50
	max	16,50	20,50	25,50	32,50
dh	min	9,90	13,60	16,00	22,00
	max	10,70	14,40	17,00	23,00
h	min	2,50	4,30	5,30	6,30
	max	2,90	4,70	5,70	6,70

All dimensions in mm.

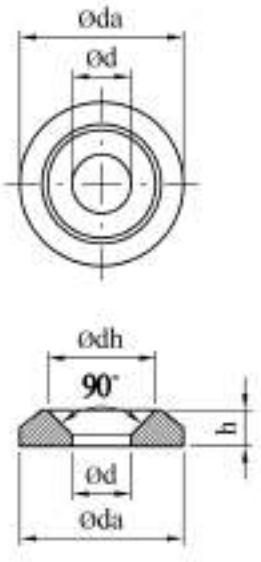

Washer for head type FK 125°

nominal size		Ø8,0
d	min	10,30
	max	10,90
da	min	27,00
	max	28,00
dh	min	18,20
	max	19,00
h	min	7,00
	max	7,80

All dimensions in mm.

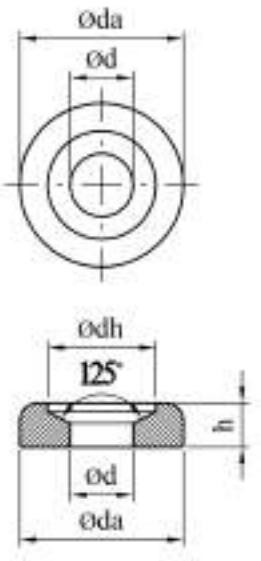

[1] Material specification held on file by ETA Danmark.

Annex B
Minimum distances and spacing

Axially loaded screws
Single configuration

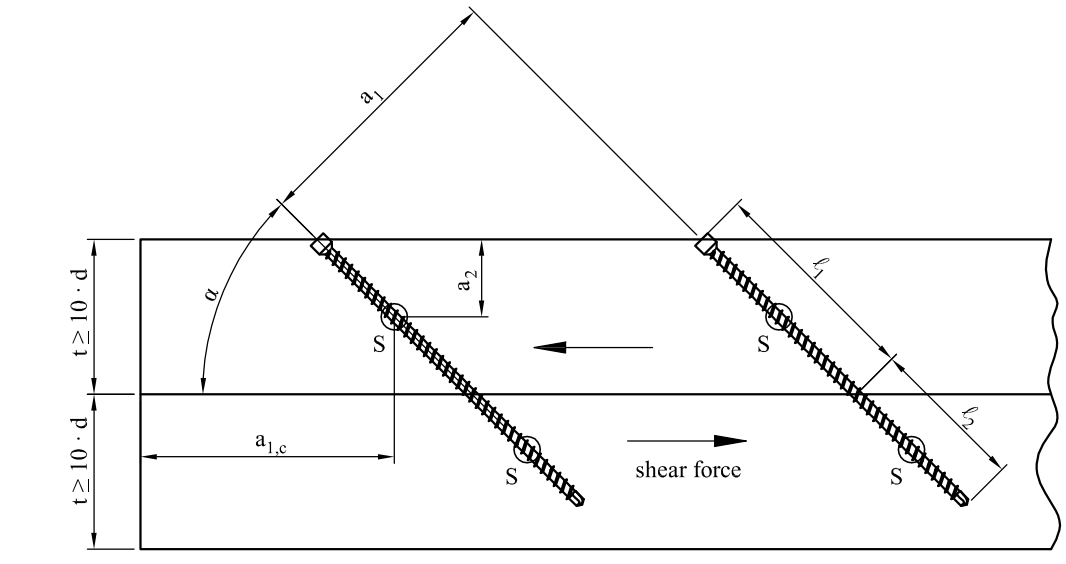

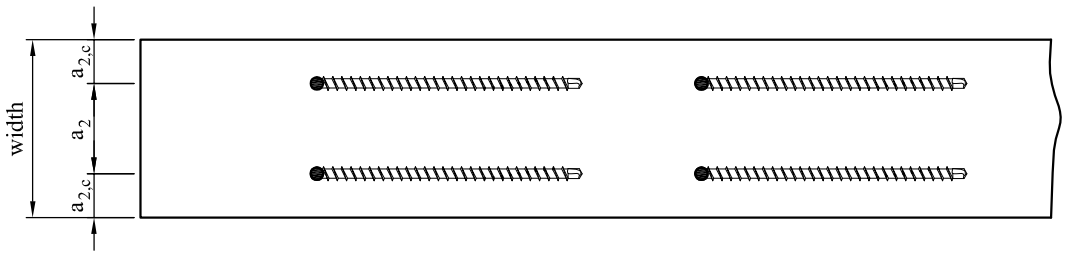

S = centroid of the part of the screw in the timber

Minimum distances and spacings for exclusively axially loaded screws in non-predrilled holes.
Minimum timber thickness $t = 10 \cdot d$, minimum timber width $w = \max \{8 \cdot d; 60\ mm\}$.
$a_1 \geq 5 \cdot d$ $a_2 \geq 5 \cdot d$ $a_{1,c} \geq 10 \cdot d$ $a_{2,c} \geq 4 \cdot d$

Minimum distances and spacings for exclusively axially loaded screws in predrilled holes or for screws with tip type BS or rBS DAG in non-predrilled holes. Minimum timber thickness $t = 10 \cdot d$, minimum timber width $w = \max \{8 \cdot d; 60\ mm\}$.
$a_1 \geq 5 \cdot d$ $a_2 \geq 5 \cdot d$ $a_{1,c} \geq 5 \cdot d$ $a_{2,c} \geq 3 \cdot d$

Spacing a_2 may be reduced from $5 \cdot d$ to $2{,}5 \cdot d$, if the condition $a_1 \cdot a_2 \geq 25 \cdot d^2$ is fulfilled.

For a crossed screw couple the minimum spacing between the crossing screws is $1{,}5 \cdot d$.

Minimum distances and spacings, see also 3.12
$0° \leq \alpha \leq 90°$ for all tip types ecxept tip type BS, see also 3.9
$30° \leq \alpha \leq 90°$ for screws with tip type BS, see also 3.9

Axially loaded screws
Crosswise configuration

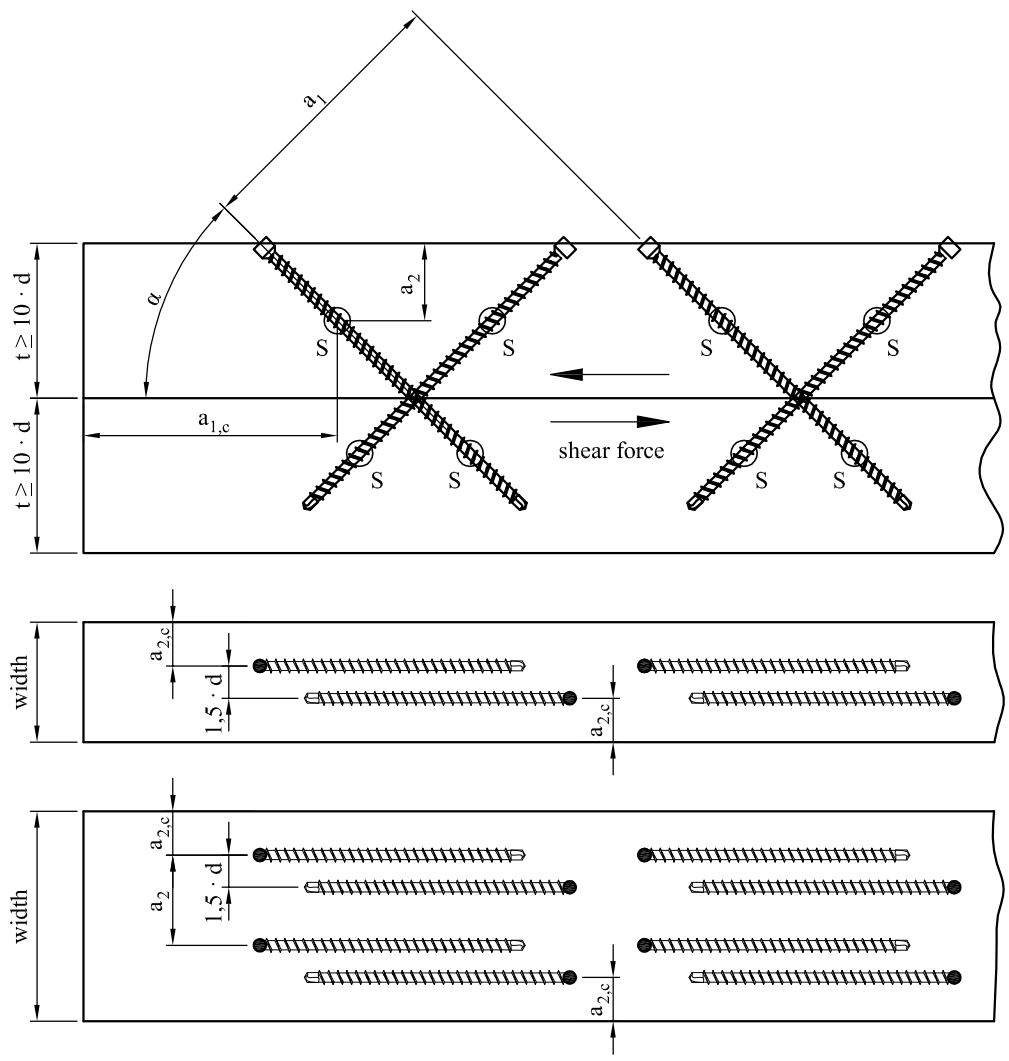

S = centroid of the part of the screw in the timber

Minimum distances and spacings for exclusively axially loaded screws in non-predrilled holes.
Minimum timber thickness t = 10 · d, minimum timber width w = max {8 · d; 60 mm}.
$a_1 \geq 5 \cdot d$ $a_2 \geq 5 \cdot d$ $a_{1,c} \geq 10 \cdot d$ $a_{2,c} \geq 4 \cdot d$

Minimum distances and spacings for exclusively axially loaded screws in predrilled holes or for screws with tip type BS or rBS DAG in non-predrilled holes. Minimum timber thickness t = 10 · d, minimum timber width w = max {8 · d; 60 mm}.
$a_1 \geq 5 \cdot d$ $a_2 \geq 5 \cdot d$ $a_{1,c} \geq 5 \cdot d$ $a_{2,c} \geq 3 \cdot d$

Spacing a_2 may be reduced from 5 · d to 2,5 · d, if the condition $a_1 \cdot a_2 \geq 25 \cdot d^2$ is fulfilled.

For a crossed screw couple the minimum spacing between the crossing screws is 1,5 · d.

Minimum distances and spacings, see also 3.12
$0° \leq \alpha \leq 90°$ for all tip types ecxept tip type BS, see also 3.9
$30° \leq \alpha \leq 90°$ for screws with tip type BS, see also 3.9

Axially or laterally loaded screws in the plane or edge surface of cross laminated timber

Figure 1: Definition of spacing, end and edge distances in the plane surface (wide face) unless otherwise specified in the technical specification (ETA or hEN) for the cross laminated timber:

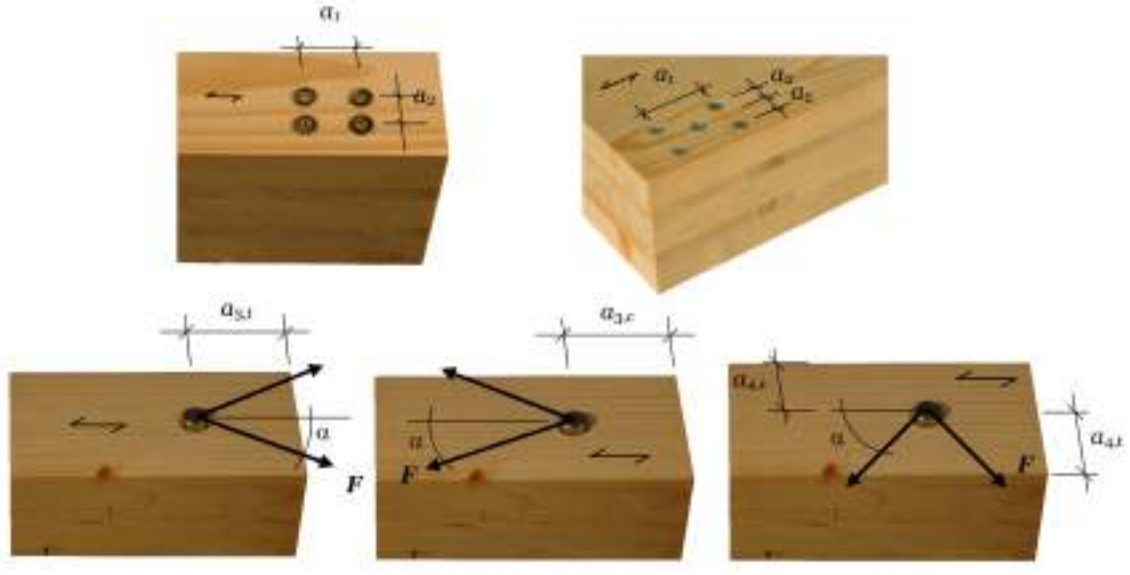

Figure 2: Definition of spacing, end and edge distances in the edge surface unless otherwise specified in the technical specification (ETA or hEN) for the cross laminated timber:

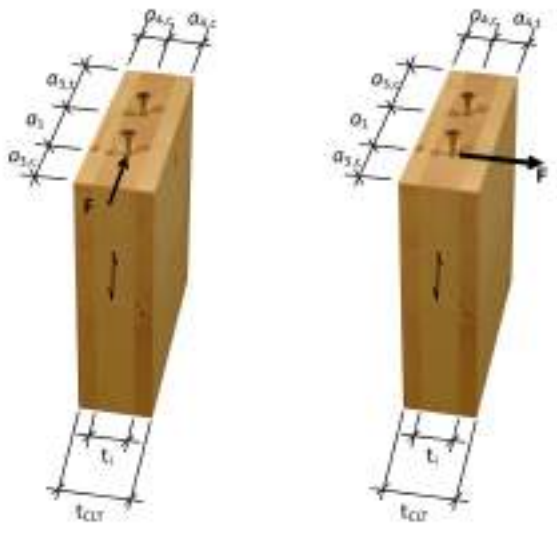

Minimum distances and spacing for screws in the plane surface (wide surface) or edge surface of cross laminated timber

	a_1	$a_{1,t}$	$a_{1,c}$	a_2	$a_{4,t}$	$a_{4,c}$
Plane surface (wide face), see figure 1	4 · d	6 · d	6 · d	2,5 · d	6 · d	2,5 · d
Edge surface, see figure 2	10 · d	12 · d	7 · d	4 · d	6 · d	3 · d

Annex C
Compression reinforcement

„KonstruX" screws or "Brutus" threaded rods with a full thread may be used for reinforcement of timber members with compression stresses at an angle α to the grain of 45° ≤ α ≤ 90°. The compression force must be evenly distributed over all screws.

The characteristic load-carrying capacity for a contact area with screws with a full thread at an angle α to the grain of 45° < α < 90° shall be calculated from:

$$F_{90,Rd} = \min \begin{Bmatrix} k_{c,90} \cdot B \cdot \ell_{ef,1} \cdot f_{c,90,d} + n \cdot \min (F_{ax,Rd}; F_{ki,Rd}) \\ B \cdot \ell_{ef,2} \cdot f_{c,90,d} \end{Bmatrix}$$

Where

$F_{90,Rd}$	design load-carrying capacity of reinforced contact area [N]
$k_{c,90}$	factor for compression perpendicular to the grain according to EN 1995-1-1
B	bearing width [mm]
$\ell_{ef,1}$	effective length of contact area according to EN 1995-1-1 [mm]
$f_{c,90,d}$	design compressive strength perpendicular to the grain [N/mm²]
n	number of reinforcement screws, $n = n_0 \cdot n_{90}$
n_0	number of reinforcement screws arranged in a row parallel to the grain
n_{90}	number of reinforcement screws arranged in a row perpendicular to the grain
$F_{ax,Rd}$	design axial withdrawal capacity [N]
$F_{ki,Rd}$	design buckling capacity [N]
$\ell_{ef,2}$	effective distribution length in the plane of the screw tips [mm]
$\ell_{ef,2}$	$= \ell_{ef} + (n_0 - 1) \cdot a_1 + \min (\ell_{ef}; a_{1,c})$ for end bearings [mm]
$\ell_{ef,2}$	$= 2 \cdot \ell_{ef} + (n_0 - 1) \cdot a_1$ for centre-bearings [mm]
a_1	spacing parallel to the grain [mm]
$a_{1,c}$	end distance [mm]

Reinforcing screws or threaded rods for wood-based panels are not covered by this European Technical Assessment.

Reinforced end bearing

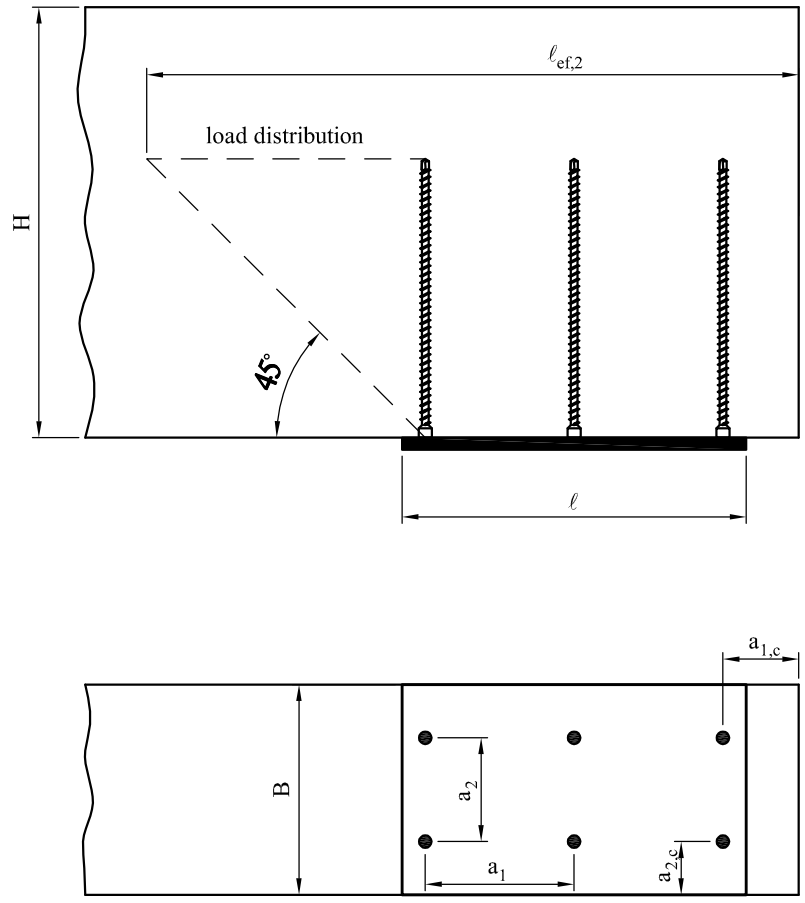

H component height [mm]
B bearing width [mm]
ℓ_{ef} point side penetration length [mm]
$\ell_{ef,2}$ effective distribution length in the plane of the screw tips [mm]
$= \ell_{ef} + (n_0 - 1) \cdot a_1 + \min(\ell_{ef}; a_{1,c})$ for end bearings

Reinforced centre-bearing

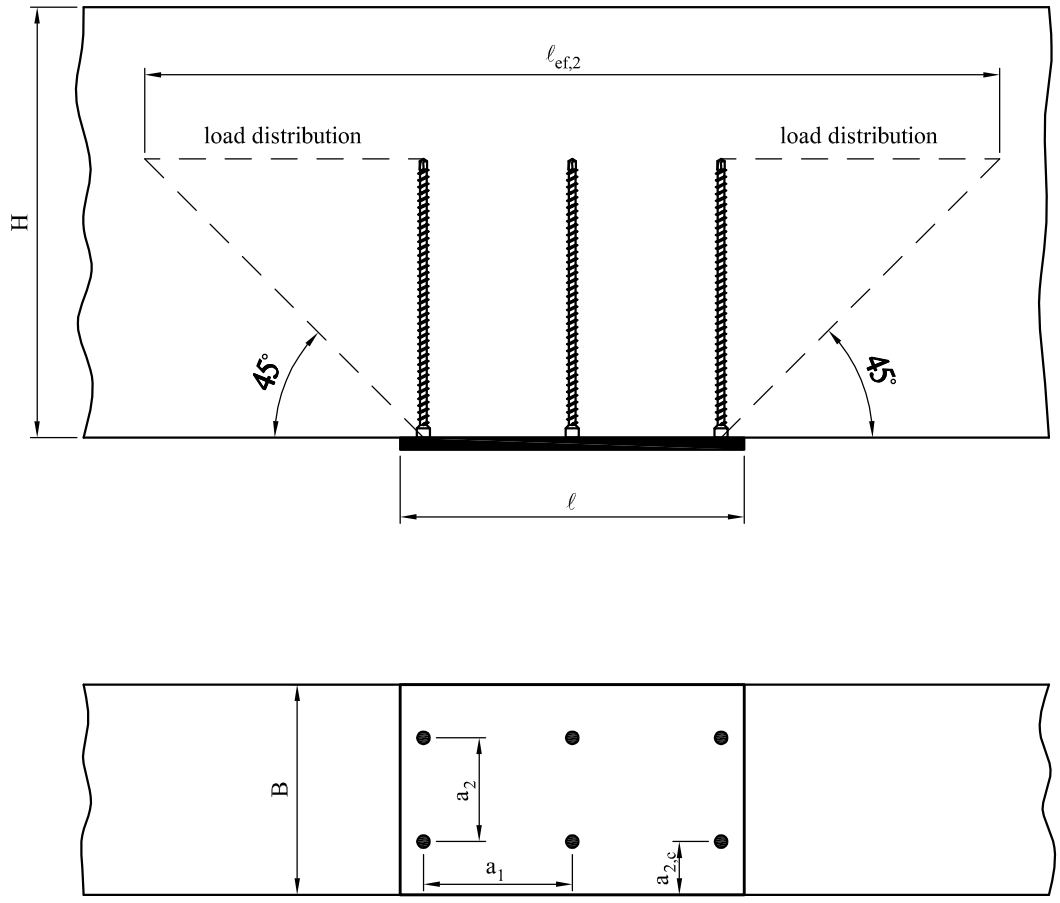

H component height [mm]
B bearing width [mm]
ℓ_{ef} point side penetration length [mm]
$\ell_{ef,2}$ effective distribution length in the plane of the screw tips [mm]
$= 2 \cdot \ell_{ef} + (n_0 - 1) \cdot a_1$ for centre-bearings

Annex D
Tensile reinforcement perpendicular to grain

Timber member loaded by a connection force perpendicular to the grain

„KonstruX" screws or "Brutus" threaded rods with a full thread may be used for reinforcement of timber members with tensile stresses perpendicular to the grain. The tensile force must be evenly distributed over all screws.

Unless specified otherwise in national provisions that apply at the installation site, the axial capacity of a reinforcement of a timber member loaded by a connection force perpendicular to the grain shall fulfil the following condition:

$$\frac{[1 - 3 \cdot \alpha^2 + 2 \cdot \alpha^3] \cdot F_{90,d}}{F_{ax,Rd}} \leq 1$$

Where

$F_{90,d}$ design value of the force component perpendicular to the grain [N]
α = a/h [mm]
h member depth [mm]
$F_{ax,Rd}$ minimum of the design values of the withdrawal capacity and the tensile capacity of the reinforcing screws or threaded rods where ℓ_{ef} is the smaller value of the penetration depth below or above the potential crack [N]

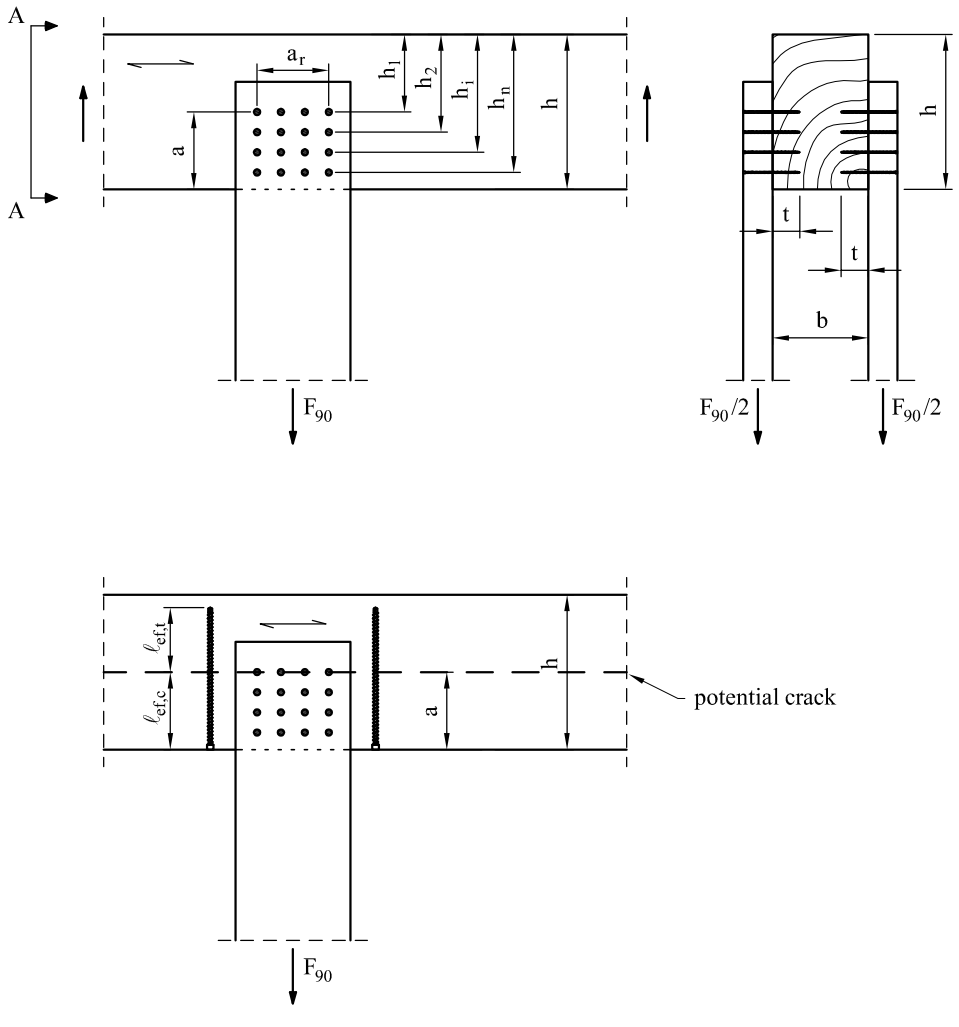

Notched beam support

Unless specified otherwise in national provisions that apply at the installation site, the axial capacity of a reinforcement of a notched beam support shall fulfil the following condition:

$$\frac{1{,}3 \cdot V_d \cdot [3 \cdot (1 - \alpha)^2 - 2 \cdot (1 - \alpha)^3]}{F_{ax,Rd}} \leq 1$$

Where

V_d design value of the shear force [N]

α $= h_{ef} / h$ [mm]

h member depth [mm]

$F_{ax,Rd}$ minimum of the design values of the withdrawal capacity and the tensile capacity of the reinforcing screws or threaded rods where ℓ_{ef} is the smaller value of the penetration depth below or above the potential crack [N]

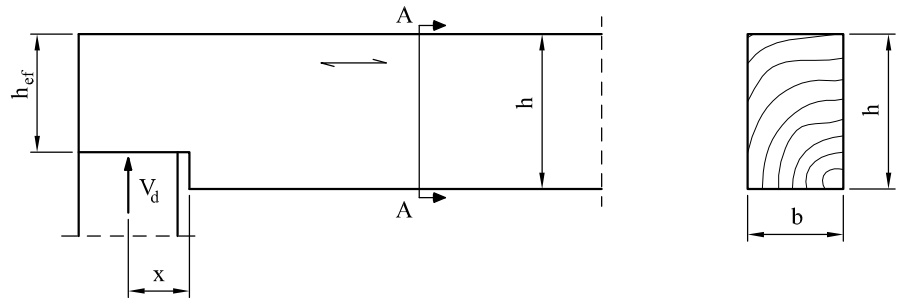

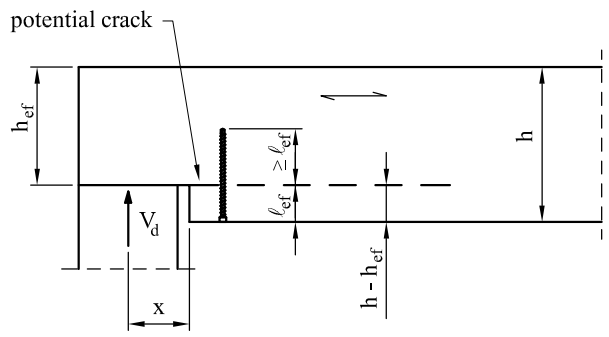

Beam hole

Unless specified otherwise in national provisions that apply at the installation site, the axial capacity of a reinforcement of a hole in a beam shall fulfil the following condition:

$$\frac{F_{t,V,d} + F_{t,M,d}}{F_{ax,Rd}} \leq 1$$

Where

$F_{t,V,d}$ design value of the force perpendicular to the grain due to shear force:

$$F_{t,V,d} = \frac{V_d \cdot h_d}{4 \cdot h} \cdot \left[3 - \frac{h_d^2}{h^2} \right] \quad [N]$$

V_d design value of the shear force [N]
h member depth [mm]
h_d hole depth for rectangular holes [mm]
h_d 70 % of hole diameter for circular holes [mm]
$F_{t,M,d}$ design value of the force perpendicular to the grain due to bending moment:

$$F_{t,M,d} = 0{,}008 \cdot \frac{M_d}{h_r} \quad [N]$$

M_d design value of the member bending moment at the hole end [Nmm]
h_r = min (h_{ro} ; h_{ru}) for rectangular holes [mm]
h_r = min (h_{ro} ; h_{ru}) + 0,15 · h_d for circular holes [mm]
$F_{ax,Rd}$ minimum of the design values of the withdrawal capacity and the tensile capacity of the reinforcing screws or threaded rods where ℓ_{ef} is the smaller value of the penetration depth below or above the potential crack [N]

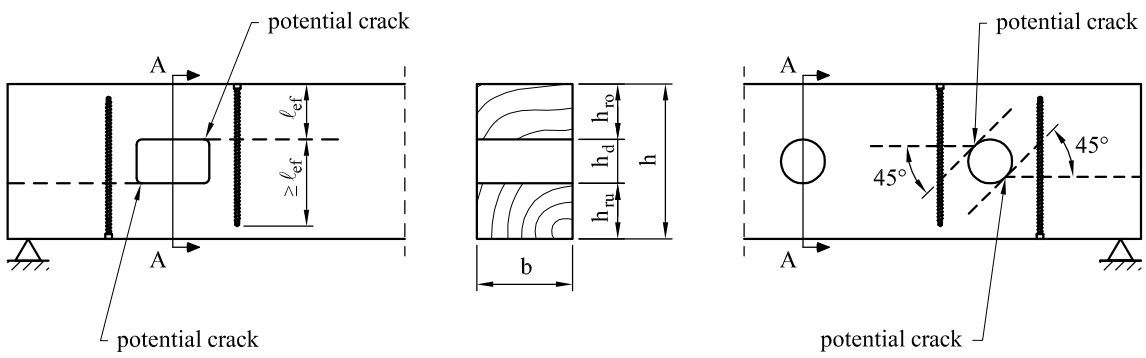

Annex E
Thermal insulation on top of rafters

E.u.r.o.Tec screws with an outer thread diameter 6 mm ≤ d ≤ 12 mm may be used for the fixing of heat insulation on top of rafters.

The thickness of the insulation shall not exceed 400 mm. The rafter insulation must be placed on top of solid timber or glued laminated timber rafters or cross-laminated timber members and be fixed by battens arranged parallel to the rafters or by wood-based panels on top of the insulation layer. The insulation of vertical facades is also covered by the rules given here.

Screws must be screwed in the rafter through the battens or panels and the insulation without pre-drilling in one sequence.

The angle α between the screw axis and the grain direction of the rafter should be between 30° and 90°.

The rafter consists of solid timber (softwood) according to EN 338, glued laminated timber according to EN 14081, cross-laminated timber, or laminated veneer lumber according to EN 14374 or to European Technical Assessment or similar glued members according to European Technical Assessment.

The battens must be from solid timber (softwood) according to EN 338. The minimum thickness t and the minimum width b of the solid timber battens is given as follows:

Screws d ≤ 8,0 mm:	b_{min} = 50 mm	t_{min} = 30 mm
Screws d = 10,0 mm:	b_{min} = 60 mm	t_{min} = 40 mm
Screws d = 12,0 mm:	b_{min} = 80 mm	t_{min} = 100 mm

The insulation must comply with a European Technical Assessment.

Friction forces shall not be considered for the design of the characteristic axial capacity of the screws.

The anchorage of wind suction forces as well as the bend ing stresses of the battens or the boards, respectively, shall be considered in design. Additional screws perpendicular to the grain of the rafter (angle α= 90°) may be arranged if necessary.

The maximum screw spacing is e_S= 1,75 m.

Thermal insulation on rafters with parallel inclined screws

Mechanical model

The system of rafter, heat insulation material on top of rafter and battens parallel to the rafter may be considered as a beam on elastic foundation. The batten represents the beam, and the heat insulation material on top of the rafter the elastic foundation. The minimum compression stress of the heat insulation material at 10 % deformation, measured according to EN 826,[1] shall be $\sigma_{10\%}$= 0,05 N/mm². The batten is loaded perpendicular to the axis by point loads F_b Further point loads F_s are from the shear load of the roof due to dead and snow load, which are transferred from the screw heads into the battens.

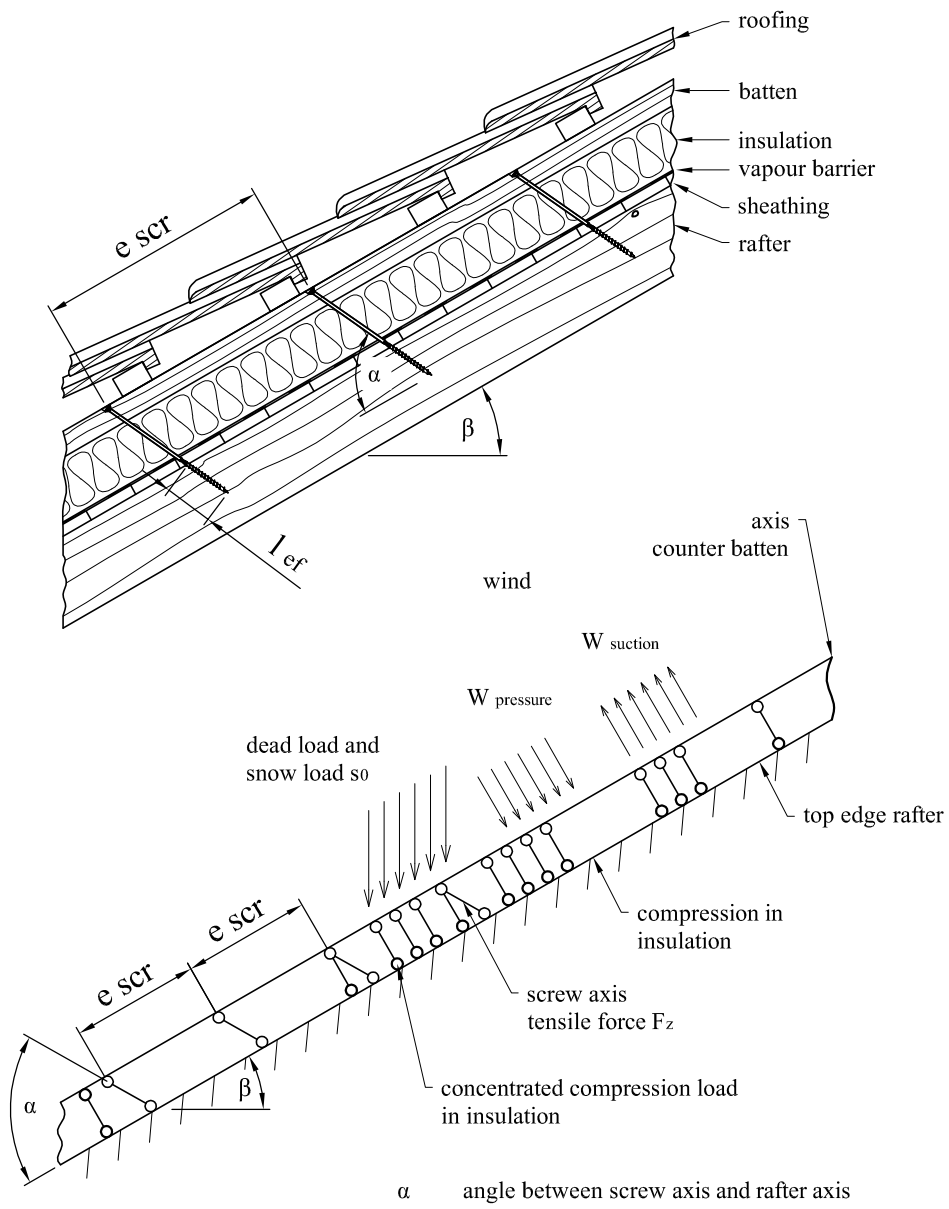

α angle between screw axis and rafter axis
β roof pitch
e scr screws distance
lef penetration length in the rafter

[1] EN 826:1996 Thermal insulating products for building applications - Determination of compression behaviour

Thermal insulation on rafters with parallel inclined screws

Design of the battens

The bending stresses are calculated as:

$$M = \frac{(F_b + F_s) \cdot \ell_{char}}{4}$$

Where
F_b point loads perpendicular to the battens [N]
F_s point loads perpendicular to the battens, load application in the area of the screw heads [N]

ℓ_{char} characteristic length $\ell_{char} = \sqrt[4]{\frac{4 \cdot EI}{w_{ef} \cdot K}}$ [mm]

EI bending stiffness of the batten [N/mm² · mm⁴]
w_{ef} effective width of the thermal insulation material [mm]
K coefficient of subgrade

The coefficient of subgrade K may be calculated from the modulus of elasticity E_{HI} and the thickness t_{HI} of the heat insulation material if the effective width w_{ef} of the heat insulation material under compression is known. Due to the load extension in the heat insulation material the effective width w_{ef} is greater than the width of the batten or rafter, respectively. For further calculations, the effective width w_{ef} of the heat insulation material may be determined according to:

$$w_{ef} = w + t_{HI}/2$$

Where
w minimum width of the batten or rafter, respectively [mm]
t_{HI} thickness of the heat insulation [mm]

$$K = \frac{E_{HI}}{t_{HI}}$$

The following condition shall be satisfied:

$$\frac{\sigma_{m,d}}{f_{m,d}} = \frac{M_d}{W \cdot f_{m,d}} \leq 1$$

For the calculation of the section modulus W of the net cross section has to be considered.

The shear stresses shall be calculated according to:

$$V = \frac{(F_b + F_s)}{2}$$

The following condition shall be satisfied:

$$\frac{\tau_d}{f_{v,d}} = \frac{1{,}5 \cdot V_d}{A \cdot f_{v,d}} \leq 1$$

Design of the heat insulation material

The compressive stresses in the thermal insulation material shall be calculated according to:

$$\sigma = \frac{1{,}5 \cdot F_b + F_s}{2 \cdot \ell_{char} \cdot w}$$

The design value of the compressive stress shall not be greater than 110 % of the compressive stress at 10 % deformation calculated according to EN 826.

Thermal insulation on rafters with parallel inclined screws

Design of the screws

Alternatively to the battens, wood-based panels with a minimum thickness of 20 mm from plywood according to EN 636, particle board according to EN 312, oriented strand board OSB/3 and OSB/4 according to EN 300 or European Technical Approval and solid wood panels ac cording to EN 13353 or cross laminated timber may be used.

The insulation must have a minimum compressive stress of $\sigma_{10\%} = 0{,}05$ N/mm² at 10 % deformation according to EN 826.

The analysis of the fixing of the insulation and battens or boards, respectively, may be carried out using the static model showed on previous pages. The battens or boards, respectively, must have sufficient strength and stiffness. The maximum design value of the compressive stress between the battens or boards, respectively, and the insulation shall not exceed $1{,}1 \cdot \sigma_{10\%}$.

The screws are loaded predominantly axially. The axial tension force in the screw may be calculated from the shear loads of the roof R_s:

$$T_s = \frac{R_s}{\cos \alpha}$$

The design axial capacity of the "Paneltwistec", "SP FK", "Speedo" and "SP ZK" screws for rafter or facade insulation shall be calculated from:

$$F_{ax,\alpha,Rd} = \min \left\{ k_{ax} \cdot f_{ax,d} \cdot d \cdot \ell_{ef,r} \cdot k_1 \cdot k_2 \cdot \left(\frac{\rho_{k,r}}{350}\right)^{0,8} ;\ f_{head,d} \cdot d_h^2 \cdot \left(\frac{\rho_{k,b}}{350}\right)^{0,8} ;\ \frac{f_{tens,k}}{\gamma_{M2}} \right\}$$

The design axial capacity of the "KonstruX" or "Topduo" screws for rafter or facade insulation shall be calculated from:

$$F_{ax,\alpha,Rd} = \min \left\{ k_{ax} \cdot f_{ax,d} \cdot d \cdot \ell_{ef,r} \cdot k_1 \cdot k_2 \cdot \left(\frac{\rho_{k,r}}{350}\right)^{0,8} ;\ \max \left\{ \begin{matrix} f_{head,d} \cdot d_h^2 \\ k_{ax} \cdot f_{ax,d} \cdot d \cdot \ell_{ef,b} \end{matrix} \right\} \cdot \left(\frac{\rho_{k,b}}{350}\right)^{0,8} ;\ \frac{f_{tens,k}}{\gamma_{M2}} \right\}$$

Where

$F_{ax,\alpha,Rd}$	design axial capacity of the screw at an angle α to the grain [N]
k_{ax}	= 1,0 for $45° \le \alpha \le 90°$
	= 0,3 + (0,7 · α/45°) for $0° \le \alpha < 45°$
$f_{ax,d}$	design withdrawal parameter [N/mm²]
d	outer thread diameter [mm]
d_h	head diameter [mm]
$\ell_{ef,r}$	point side penetration length of the threaded part according to EN 1995-1-1 [mm]
$\ell_{ef,b}$	length of the threaded part in the batten [mm]
α	angle between grain and screw axis ($\alpha \ge 30°$)
k_1	min {1; $220/t_{HI}$}
k_2	min {1; $\sigma_{10\%}/0{,}12$}
	If equation k_1 and k_2 are considered, the deflection of the battens does not need to be considered.
t_{HI}	thickness of the heat insulation [mm]
$\sigma_{10\%}$	compressive stress of the heat insulation under 10 % deformation [N/mm²]
	$\sigma_{10\%} \ge 0{,}05$ N/mm²
$\rho_{k,r}$	characteristic density of the rafter [kg/m³]
$\rho_{k,b}$	characteristic density of the batten [kg/m³]
$f_{head,d}$	design head pull-through parameter [N/mm²]
$f_{tens,k}$	characteristic tensile capacity [N]
γ_{M2}	partial safety factor according to EN 1993-1-1 or according to national annex

Thermal insulation on rafters with parallel inclined screws

Fixing of battens with parallel screws perpendicular to the roof plane

Alternatively to the battens, wood-based panels with a minimum thickness of 20 mm from plywood according to EN 636, particle board according to EN 312, oriented strand board OSB/3 and OSB/4 according to EN 300 or European Technical Assessment and solid wood panels according to EN 13353 or cross laminated timber may be used.

The insulation must have a minimum compressive stress of $\sigma_{10\%} = 0{,}05$ N/mm² at 10 % deformation according to EN 826.

The battens or wood-based panels, respectively, must have sufficient strength and stiffness. The maximum design value of the compressive stress between the battens or boards, respectively, and the insulation shall not exceed $1{,}1 \cdot \sigma_{10\%}$.

The characteristic load-carrying capacity of the screws loaded in shear may be calculated from:

$$F_{v,Rk} = \min \begin{cases} f_{h,b,k} \cdot d \cdot t_b \\ f_{h,r,k} \cdot d \cdot t_r \\ \frac{f_{h,b,k} \cdot d \cdot \beta}{1+\beta} \cdot \left(\sqrt{4t_{il}^2 + \left(2 + \frac{1}{\beta}\right) t_b^2 + (2+\beta) t_r^2 + 4t_{il}(t_b + t_r) + 2t_b t_r} - 2t_{il} - t_b - t_r \right) + \frac{F_{ax,Rk}}{4} \\ 1{,}05 \cdot \frac{f_{h,b,k} \cdot d \cdot \beta}{\frac{1}{2}+\beta} \cdot \left(\sqrt{t_{il}^2 + t_{il} t_b + \frac{t_b^2}{2}\left(1 + \frac{1}{\beta}\right) + \frac{M_{y,k}}{f_{h,b,k} \cdot d}\left(1 + \frac{2}{\beta}\right)} - t_{il} - \frac{t_b}{2} \right) + \frac{F_{ax,Rk}}{4} \\ 1{,}05 \cdot \frac{f_{h,b,k} \cdot d \cdot \beta}{\frac{1}{2}+\beta} \cdot \left(\sqrt{t_{il}^2 + t_{il} t_r + \frac{t_r^2}{2}\left(1 + \beta\right) + \frac{M_{y,k}}{f_{h,b,k} \cdot d}\left(2 + \frac{1}{\beta}\right)} - t_{il} - \frac{t_r}{2} \right) + \frac{F_{ax,Rk}}{4} \\ 1{,}15 \cdot \frac{f_{h,b,k} \cdot d \cdot \beta}{1+\beta} \cdot \left(\sqrt{\beta^2 t_{il}^2 + 4\beta(\beta+1) \cdot \frac{M_{y,k}}{f_{h,b,k} \cdot d}} - \beta t_{il} \right) + \frac{F_{ax,Rk}}{4} \end{cases}$$

Where

$f_{h,b,k}$	characteristic batten embedding strength [N/mm²]
$f_{h,r,k}$	characteristic rafter embedding strength [N/mm²]
β	$f_{h,r,k} / f_{h,b,k}$
d	outer thread diameter [mm]
t_b	batten thickness [mm]
t_r	lower value of rafter thickness or screw penetration length [mm]
t_{il}	interlayer thickness [mm]
$M_{y,k}$	characteristic fastener yield moment [Nmm]
$F_{ax,Rk}$	characteristic axial capacity of the screw [N]

Thermal insulation on rafters with alternatively inclined screws

Mechanical model

Depending on the screw spacing and the arrangement of tensile and compressive screws with different inclinations the battens are loaded by significant bending moments. The bending moments are derived based on the following assumptions:

- The tensile and compressive loads in the screws are determined based on equilibrium conditions from the actions parallel and perpendicular to the roof plane. These actions are constant line loads $q_{\perp}$ and q_{II}.
- The screws act as hinged columns supported 10 mm within the batten or rafter, respectively. The effective column length consequently equals the length of the screw between batten and rafter plus 20 mm.
- The batten is considered as a continuous beam with a constant span $\ell = A + B$. The compressive screws constitute the supports of the continuous beam while the tensile screws transfer concentrated loads perpendicular to the batten axis.

The screws are predominantly loaded in withdrawal or compression, respectively. The screw's normal forces are determined based on the loads parallel and perpendicular to the roof plane:

compressive screw: $$F_{c,Ed} = (A + B) \cdot \left(- \frac{q_{II}}{\cos\alpha_1 + \sin\alpha_1 / \tan\alpha_2} - \frac{q_{\perp} \cdot \sin(90° - \alpha_2)}{\sin(\alpha_1 + \alpha_2)} \right)$$

tensile screw: $$F_{t,Ed} = (A + B) \cdot \left(\frac{q_{II}}{\cos\alpha_2 + \sin\alpha_2 / \tan\alpha_1} - \frac{q_{\perp} \cdot \sin(90° - \alpha_1)}{\sin(\alpha_1 + \alpha_2)} \right)$$

The bending moments in the batten follow from the constant line load $q_{\perp}$ and the load components perpendicular to the batten from the tensile screws. The span of the continuous beam is (A + B). The load component perpendicular to the batten from the tensile screw is:

$$F_{ZS,Ed} = (A + B) \cdot \left(\frac{q_{II}}{1 / \tan\alpha_1 + 1 / \tan\alpha_2} - \frac{q_{\perp} \cdot \sin(90° - \alpha_1) \cdot \sin\alpha_2}{\sin(\alpha_1 + \alpha_2)} \right)$$

Where

q_{II} constant line load parallel to batten
$q_{\perp}$ constant line load perpendicular to batten
α_1 angle between compressive screw axis and grain direction
α_2 angle between tensile screw axis and grain direction

A positive value for F_{ZS} means a load towards the rafter, a negative value a load away from the rafter.

Thermal insulation on rafters with alternatively inclined screws

Mechanical model

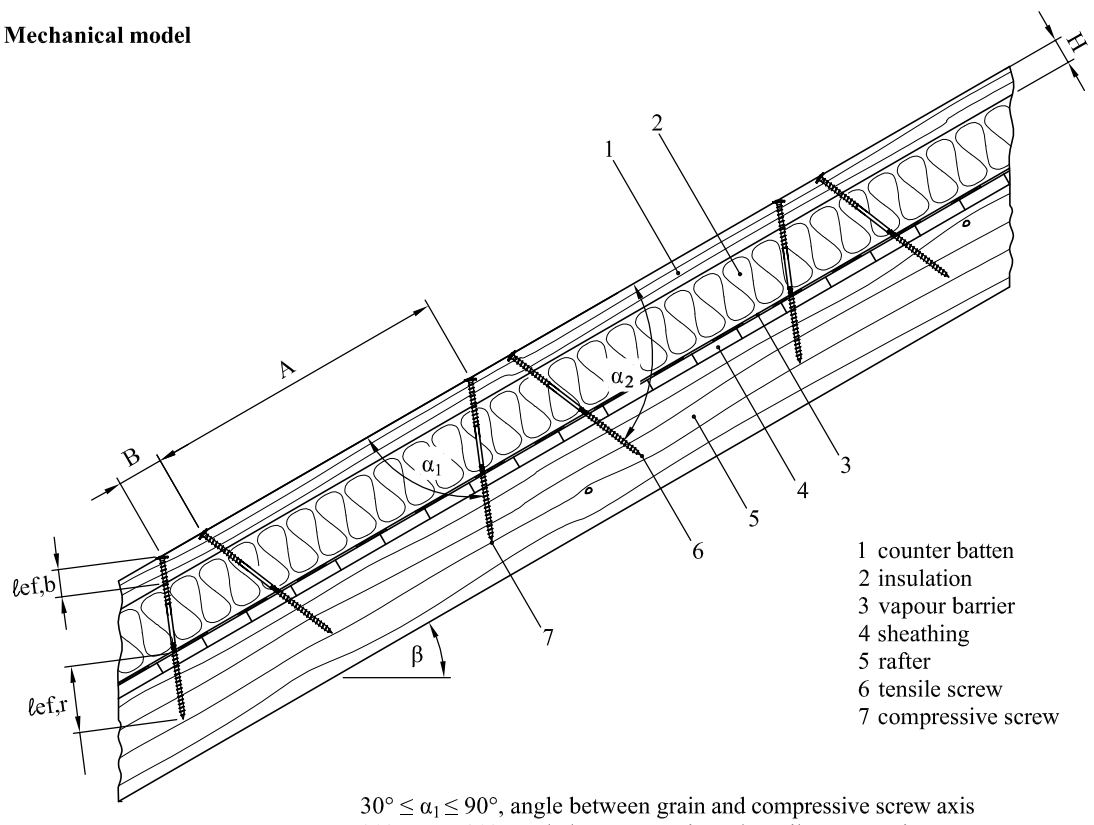

$30° \le \alpha_1 \le 90°$, angle between grain and compressive screw axis

$30° \le \alpha_2 \le 90°$, angle between grain and tensile screw axis

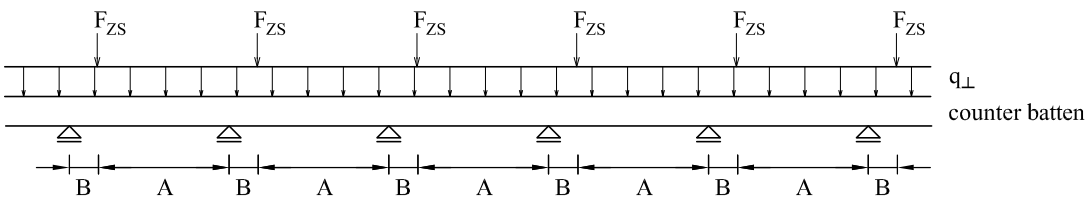

compressive screw: $F_{c,Ed} = (A + B) \cdot \left(- \frac{q_{II}}{\cos\alpha_1 + \sin\alpha_1 / \tan\alpha_2} - \frac{q_\perp \cdot \sin(90° - \alpha_2)}{\sin(\alpha_1 + \alpha_2)} \right)$

tensile screw: $F_{t,Ed} = (A + B) \cdot \left(\frac{q_{II}}{\cos\alpha_2 + \sin\alpha_2 / \tan\alpha_1} - \frac{q_\perp \cdot \sin(90° - \alpha_1)}{\sin(\alpha_1 + \alpha_2)} \right)$

concentrated load: $F_{ZS,Ed} = (A + B) \cdot \left(\frac{q_{II}}{1 / \tan\alpha_1 + 1 / \tan\alpha_2} - \frac{q_\perp \cdot \sin(90° - \alpha_1) \cdot \sin\alpha_2}{\sin(\alpha_1 + \alpha_2)} \right)$

Where
q_{II} constant line load parallel to batten
$q_\perp$ constant line load perpendicular to batten
α_1 angle between compressive screw axis and grain direction
α_2 angle between tensile screw axis and grain direction

A positive value for F_{ZS} means a load towards the rafter, a negative value a load away from the rafter.

Thermal insulation on rafters with alternatively inclined screws

Design of the screws

The analysis of the fixing of the insulation and battens may be carried out using the static model showed on previous page. The battens must have sufficient strength and stiffness.

The design axial tensile capacity of the "KonstruX" or "Topduo" screws for rafter or facade insulation shall be calculated from:

$$F_{ax,\alpha,Rd} = \min\left\{ \max\left(\begin{matrix} f_{head,d} \cdot d_h^2 \\ k_{ax} \cdot f_{ax,d} \cdot d \cdot \ell_{ef,b} \end{matrix} \right) \cdot \left(\frac{\rho_{k,b}}{350}\right)^{0,8} ; \; k_{ax} \cdot f_{ax,d} \cdot d \cdot \ell_{ef,r} \cdot \left(\frac{\rho_{k,r}}{350}\right)^{0,8} ; \; \frac{f_{tens,k}}{\gamma_{M2}} \right\}$$

The design axial compressive capacity of the "KonstruX" or "Topduo" screws for rafter or facade insulation shall be calculated from:

$$F_{ax,\alpha,Rd} = \min\left\{ k_{ax} \cdot f_{ax,d} \cdot d \cdot \ell_{ef,b} \cdot \left(\frac{\rho_{k,b}}{350}\right)^{0,8} ; \; k_{ax} \cdot f_{ax,d} \cdot d \cdot \ell_{ef,r} \cdot \left(\frac{\rho_{k,r}}{350}\right)^{0,8} ; \; \frac{F_{ki,Rk}}{\gamma_{M1}} \right\}$$

Where

$F_{ax,\alpha,Rd}$ design axial capacity of the screw at an angle α to the grain [N]
$f_{head,d}$ design head pull-through parameter [N/mm²]
d_h head diameter [mm]
k_{ax} = 1,0 for $45° \le \alpha \le 90°$
= 0,3 + (0,7 · α/45°) for $0° \le \alpha < 45°$
$f_{ax,d}$ design withdrawal parameter [N/mm²]
d outer thread diameter [mm]
$\ell_{ef,b}$ length of the threaded part in the batten [mm]
$\ell_{ef,r}$ point side penetration length of the threaded part according to EN 1995-1-1 [mm]
α angle between grain and screw axis ($\alpha \ge 30°$)
$\rho_{k,b}$ characteristic density of the batten [kg/m³]
$\rho_{k,r}$ characteristic density of the rafter [kg/m³]
$f_{tens,k}$ characteristic tensile capacity [N]
$F_{ki,Rk}$ characteristic compressive capacity depending on free screw length between counter batten and rafter [N]
γ_{M1} γ_{M2} partial safety factor according to EN 1993-1-1 or according to national annex

Free screw length [mm]	KonstruX					Topduo
	Ø6,5	Ø8,0	Ø9,0	Ø10,0	Ø11,3	Ø8,0
	$F_{ki,Rk}$ [kN]	$F_{ki,Rk}$ [kN]	$F_{ki,Rk}$ [kN]	$F_{ki,Rk}$ [kN]	$F_{ki,Rk}$ [kN]	$F_{ki,Rk}$ [kN]
≤ 120	2,32	4,28	8,56	6,76	18,80	5,97
140	1,75	3,27	6,62	5,21	14,90	4,59
160	1,38	2,57	5,25	4,12	12,00	3,62
180	1,10	2,08	4,26	3,33	9,85	2,93
200	0,91	1,71	3,52	2,75	8,20	2,42
220	0,76	1,43	2,97	2,31	6,93	2,03
240	0,64	1,21	2,52	1,96	5,92	1,72
260	0,55	1,04	2,17	1,69	5,12	1,48
280	0,48	0,91	1,89	1,47	4,48	1,29
300	0,42	0,79	1,66	1,29	3,94	1,13
320	0,37	0,70	1,47	1,14	3,49	1,00
340	0,33	0,62	1,31	1,01	3,12	0,89
360	0,29	0,56	1,17	0,91	2,80	0,80
380	0,26	0,50	1,06	0,82	2,52	0,72
400	0,24	0,46	0,96	0,74	2,29	0,65
420	0,22	0,42	0,87	0,68	2,09	0,59